B.S. International Company Limited

T 86-519-89815665-8001
F 86-519-89815115
E bs009@bs-metal.com
A Rm. A-2506/2507 World Trade Center,
No.2 YanZheng Middle Road, Changzhou
JiangSu China

www.bs-metal-lock.com



PRODUCT BROCHURE

www.bs-metal-lock.com

About us

B.S.International Co., Ltd .
Social credit license code : 913204027573416838
Founded in 1996 , located in Changzhou Jiangsu, China
As an Import and Export Company , we have mainly been dealing in building materials , hardware, and door fittings .
Such as Locks / Handles / Cylinders/ door viewers ···
With our rich experience and professional work, we have owned good reputation from our main markets , European markets
North African / Middle East Asian markets ···
On the basis of Equality , mutual benefits and good understanding, we are sincerely to cooperate with all old and New customers.

B.S. Metal Products Co., (Changzhou) Limited
Social credit license code : 320483666202208190224
Invested and Established in 2001, by B.S. Iinternational Co., Ltd , in the suburb of Changzhou city.
With 6000 +square meters Floor area / 20,000 square building area,
Equipped with morden machines , together with a professional technica team , we have well developed and will continuously make a good progress
Mainly produce : Locks and Cylinders ,
And special packing line and a big ware -house for our exporting biz .
As a member of Sedex , every year we have to pass social audit & quality audit ···

Today, well organized by our own exporting team and our own factory .We are so confident in our business cooperation with you .
With excellent quality and good service .

Yours truly
Wang Qin/ Wang Zi Peng







Slogan: Quality determines success, service determines the future.

Certificate

03



Intertek

Intertek Legal Entity: Intertek Testing Services Shenzhen Ltd. Guangzhou Branch
Block E, No.7-2 Guang Dong Software Science Park, Caipin Road, Guangzhou Science City, GETDD, Guangzhou, China
Telephone/Fax: 86-20-8213 9688/86-20-3205 7538

Test Verification of Conformity

In the basis of the tests undertaken, the sample(s) of the below product have been found to comply with the requirements of the referenced specifications at the time the tests were carried out.

Applicant Name & Address:	B.S. Metal Products Co.,(Changzhou) Ltd 189 Dongtang Alley, Fenghuangpanjia Village, Xueyan Town, Wujin District, Changzhou City, Jiangsu Province, China
Product Description:	Brass profile cylinder
Ratings & Principle Characteristics:	1 6 0 0 0 C 5 C
Models:	TRAFIC 12, 60mm
Brand Name:	—
Relevant Standards	EN 1303: 2015
Verification Issuing Office:	Same as Legal Entity
Date of Tests:	August 1, 2016 to September 26, 2016
Test Report Number(s):	160728056GZU-001

This verification is part of the full test report(s) and should be read in conjunction with them.

Signature

Name: Happy Chen
Position: Assistant Technical Manager
Date: November 15, 2016

This Verification is for the exclusive use of Intertek's client and is provided pursuant to the agreement between Intertek and its Client. Intertek's responsibility and liability are limited to the terms and conditions of the agreement. Intertek assumes no liability to any party, other than to the Client in accordance with the agreement, for any loss, expense or damage occasioned by the use of this Verification. Only the Client is authorized to permit copying or distribution of this Verification. Any use of the Intertek name or one of its marks for the sale or advertisement of the tested material, product or service must first be approved in writing by Intertek. The observations and test results in this Verification are relevant only to the sample tested/inspected. This Verification by itself does not imply that the material, product, or service is or has ever been under an Intertek certification program.

www.intertek.com



Intertek

Intertek Legal Entity: Intertek Testing Services Shenzhen Ltd. Guangzhou Branch
Block E, No.7-2 Guang Dong Software Science Park, Caipin Road, Guangzhou Science City, GETDD, Guangzhou, China
Telephone/Fax: 86-20-8213 9688/86-20-3205 7538

Test Verification of Conformity

In the basis of the tests undertaken, the sample(s) of the below product have been found to comply with the requirements of the referenced specifications at the time the tests were carried out.

Applicant Name & Address:	B.S. Metal Products Co.,(Changzhou) Ltd 189 Dongtang Alley, Fenghuangpanjia Village, Xueyan Town, Wujin District, Changzhou City, Jiangsu Province, China
Product Description:	brass profile cylinder
Ratings & Principle Characteristics:	1 6 0 0 0 B 2 0
Models:	5A,60mm
Brand Name:	—
Relevant Standards	EN 1303: 2015
Verification Issuing Office:	Same as Legal Entity
Date of Tests:	February 22, 2016 to March 11, 2016
Test Report Number(s):	160728028GZU-001

This verification is part of the full test report(s) and should be read in conjunction with them.

Signature

Name: Happy Chen
Position: Assistant Technical Manager
Date: August 25, 2016

This Verification is for the exclusive use of Intertek's client and is provided pursuant to the agreement between Intertek and its Client. Intertek's responsibility and liability are limited to the terms and conditions of the agreement. Intertek assumes no liability to any party, other than to the Client in accordance with the agreement, for any loss, expense or damage occasioned by the use of this Verification. Only the Client is authorized to permit copying or distribution of this Verification. Any use of the Intertek name or one of its marks for the sale or advertisement of the tested material, product or service must first be approved in writing by Intertek. The observations and test results in this Verification are relevant only to the sample tested/inspected. This Verification by itself does not imply that the material, product, or service is or has ever been under an Intertek certification program.

www.intertek.com



Intertek

Intertek Legal Entity: Intertek Testing Services Shenzhen Ltd. Guangzhou Branch
Block E, No.7-2 Guang Dong Software Science Park, Caipin Road, Guangzhou Science City, GETDD, Guangzhou, China
Telephone/Fax: 86-20-8213 9688/86-20-3205 7538

Test Verification of Conformity

In the basis of the tests undertaken, the sample(s) of the below product have been found to comply with the requirements of the referenced specifications at the time the tests were carried out.

Applicant Name & Address:	B.S. Metal Products Co., Ltd(Changzhou) 189 Dongtang Alley, Nanzhai Fenghuang Village, Xueyan Town , Wujin District, Changzhou City,Jiangsu Province, China
Product Description:	brass profile cylinder
Ratings & Principle Characteristics:	1 6 0 0 0 C 3 C
Models:	TRAFIC 6, 60mm
Brand Name:	—
Relevant Standards	EN 1303:2015
Verification Issuing Office:	Same as Legal Entity
Date of Tests:	May 22, 2016 to June 23, 2016
Test Report Number(s):	160516086GZU-001

This verification is part of the full test report(s) and should be read in conjunction with them.

Signature

Name: Happy Chen
Position: Assistant Technical Manager
Date: July 8, 2016

This Verification is for the exclusive use of Intertek's client and is provided pursuant to the agreement between Intertek and its Client. Intertek's responsibility and liability are limited to the terms and conditions of the agreement. Intertek assumes no liability to any party, other than to the Client in accordance with the agreement, for any loss, expense or damage occasioned by the use of this Verification. Only the Client is authorized to permit copying or distribution of this Verification. Any use of the Intertek name or one of its marks for the sale or advertisement of the tested material, product or service must first be approved in writing by Intertek. The observations and test results in this Verification are relevant only to the sample tested/inspected. This Verification by itself does not imply that the material, product, or service is or has ever been under an Intertek certification program.

www.intertek.com



Intertek

Intertek Legal Entity: Intertek Testing Services Shenzhen Ltd. Guangzhou Branch
Block E, No.7-2 Guang Dong Software Science Park, Caipin Road, Guangzhou Science City, GETDD, Guangzhou, China
Telephone/Fax: 86-20-8213 9688/86-20-3205 7538

Test Verification of Conformity

In the basis of the tests undertaken, the sample(s) of the below product have been found to comply with the requirements of the referenced specifications at the time the tests were carried out.

Applicant Name & Address:	B.S. Metal Products Co.,(Changzhou) Ltd 189 Dongtang Alley, Fenghuangpanjia Village, Xueyan Town, Wujin District, Changzhou City, Jiangsu Province, China
Product Description:	Brass profile cylinder
Ratings & Principle Characteristics:	1 6 0 0 0 C 2 0
Models:	STD, 60mm
Brand Name:	—
Relevant Standards	EN 1303: 2015
Verification Issuing Office:	Same as Legal Entity
Date of Tests:	October 8, 2016 to October 26, 2016
Test Report Number(s):	160927028GZU-001

This verification is part of the full test report(s) and should be read in conjunction with them.

Signature

Name: Happy Chen
Position: Assistant Technical Manager
Date: November 25, 2016

This Verification is for the exclusive use of Intertek's client and is provided pursuant to the agreement between Intertek and its Client. Intertek's responsibility and liability are limited to the terms and conditions of the agreement. Intertek assumes no liability to any party, other than to the Client in accordance with the agreement, for any loss, expense or damage occasioned by the use of this Verification. Only the Client is authorized to permit copying or distribution of this Verification. Any use of the Intertek name or one of its marks for the sale or advertisement of the tested material, product or service must first be approved in writing by Intertek. The observations and test results in this Verification are relevant only to the sample tested/inspected. This Verification by itself does not imply that the material, product, or service is or has ever been under an Intertek certification program.

www.intertek.com

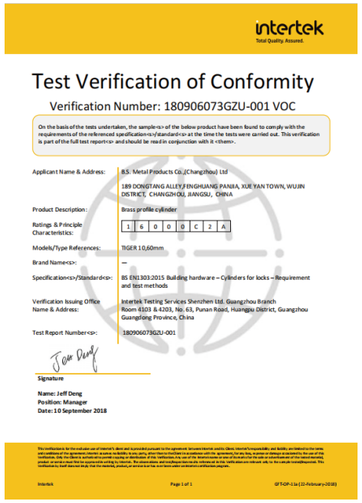

intertek
Total Quality. Assured.

Test Verification of Conformity

Verification Number: 180906073GZU-001 VOC

On the basis of the tests undertaken, the sample<s> of the below product have been found to comply with the requirements of the referenced specification<s>/standard<s> at the time the tests were carried out. This verification is part of the full test report<s> and should be read in conjunction with it <them>.

Applicant Name & Address:	B.S. Metal Products Co.,(Changzhou) Ltd 189 DONGTANG ALLEY,FENGHUANG PANJIA, XUE YAN TOWN, WUJIN DISTRICT, CHANGZHOU, JIANGSU, CHINA
Product Description:	Brass profile cylinder
Ratings & Principle Characteristics:	1 6 0 0 0 C 2 A
Models/Type References:	TIGER 1 0,60mm
Brand Name<s>:	—
Specification<s>/Standard<s>:	BS EN1303:2015 Building hardware – Cylinders for locks – Requirement and test methods
Verification Issuing Office Name & Address:	Intertek Testing Services Shenzhen Ltd. Guangzhou Branch Room 4103 & 4203, No. 63, Punan Road, Huangpu District, Guangzhou Guangdong Province, China
Test Report Number<s>:	180906073GZU-001

Signature

Name: Jeff Deng
Position: Manager
Date: 10 September 2018

This verification is for the exclusive use of Intertek's client and is provided pursuant to the agreement between Intertek and its Client. Intertek's responsibility and liability are limited to the terms and conditions of the agreement. Intertek assumes no liability to any party, other than to the Client in accordance with the agreement, for any loss, expense or damage occasioned by the use of this Verification. Only the Client is authorized to permit copying or distribution of this Verification. Any use of the Intertek name or one of its marks for the sale or advertisement of the tested material, product or service must first be approved in writing by Intertek. The observations and test results in this Verification are relevant only to the sample tested/inspected. This Verification by itself does not imply that the material, product, or service is or has ever been under an Intertek certification program.



intertek
Total Quality. Assured.

Test Verification of Conformity

Verification Number: 170816003GZU-001 VOC

On the basis of the tests undertaken, the sample<s> of the below product have been found to comply with the requirements of the referenced specifications<s>/standard<s> at the time the tests were carried out. This verification is part of the full test report<s> and should be read in conjunction with it <them>.

Applicant Name & Address:	B.S. Metal Products Co.,(Changzhou) Ltd 189 DONGTANG ALLEY, PANJIA FENGHUANG VILLAGE, XUEYAN TOWN, WUJIN DISTRICT, CHANGZHOU CITY, JIANGSU PROVINCE, CHINA
Product Description:	Brass profile cylinder
Ratings & Principle Characteristics:	1 6 0 0 0 C 2 A
Models/Type References:	TIGER 6,60mm
Brand Name<s>:	—
Specifications/Standards<s>:	BS EN 1303:2015 Building hardware – Cylinders for locks – Requirement and test methods
Verification Issuing Office Name & Address:	Intertek Testing Services Shenzhen Ltd. Guangzhou Branch Room 4103 & 4203, No. 63, Punan Road, Huangpu District, Guangzhou Guangdong Province, China
Test Report Number<s>:	170816003GZU-001

Signature

Name: Jeff Deng
Position: Manager
Date: 18 December 2018

This Verification is for the exclusive use of Intertek's client and is provided pursuant to the agreement between Intertek and its Client. Intertek's responsibility and liability are limited to the terms and conditions of the agreement. Intertek assumes no liability to any party, other than to the Client in accordance with the agreement, for any loss, expense or damage occasioned by the use of this Verification. Only the Client is authorized to permit copying or distribution of this Verification. Any use of the Intertek name or one of its marks for the sale or advertisement of the tested material, product or service must first be approved in writing by Intertek. The observations and test results in this Verification are relevant only to the sample tested/inspected. This Verification by itself does not imply that the material, product, or service is or has ever been under an Intertek certification program.



intertek
Total Quality. Assured.

Test Verification of Conformity

Verification Number: 221215059GZU-VOC002

On the basis of the tests undertaken, the sample<s> of the below product have been found to comply with the requirements of the referenced specification<s>/standard<s> at the time the tests were carried out. This verification is part of the full test report<s> and should be read in conjunction with it <them>.

Applicant Name & Address:	B.S. Metal Products Co., (Changzhou) Ltd 189 DONGTANG ALLEY, PANJIA FENGHUANG PANJIA, XUE YAN TOWN, WUJIN DISTRICT, CHANGZHOU, JIANGSU, CHINA
Product Description:	Brass profile cylinder
Ratings & Principle Characteristics:	1 5 0 0 0 C 4 D
Models/Type References:	F16
Brand Names:	Forlock
Specification<s>/Standards:	EN1303: 2015
Verification Issuing Office Name & Address:	Intertek Testing Services Shenzhen Ltd. Guangzhou Branch Room 4103 & 4203, No. 63, Punan Road, Huangpu District, Guangzhou, China
Date of Tests:	2022-12-15~2023-02-12
Test Report Number(s):	221215059GZU-002 dated 2023-02-13

Signature

Name: Nelson Zhu
Position: Technical Supervisor
Date: 14 February 2023

This verification is for the exclusive use of Intertek's client and is provided pursuant to the agreement between Intertek and its Client. Intertek's responsibility and liability are limited to the terms and conditions of the agreement. Intertek assumes no liability to any party, other than to the Client in accordance with the agreement, for any loss, expense or damage occasioned by the use of this Verification. Only the Client is authorized to permit copying or distribution of this Verification. Any use of the Intertek name or one of its marks for the sale or advertisement of the tested material, product or service must first be approved in writing by Intertek. The observations and test results in this Verification are relevant only to the sample tested/inspected. This Verification by itself does not imply that the material, product, or service is or has ever been under an Intertek certification program.

Lock For Door

Product

BS-JH- ECO-658

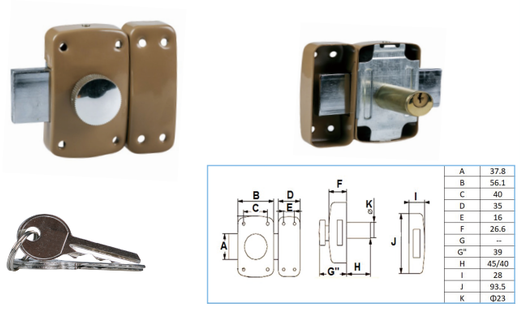

A	37.8
B	56.1
C	40
D	35
E	16
F	26.6
G	--
G"	39
H	45/40
I	28
J	93.5
K	Φ23

BS-JH- ECO-0658

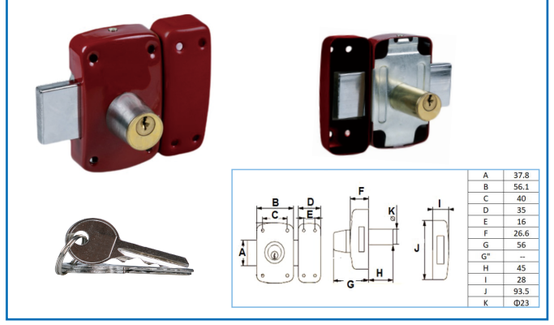

A	37.8
B	56.1
C	40
D	35
E	16
F	26.6
G	56
G"	--
H	45
I	28
J	93.5
K	Φ23

BS-JH- ECO-202

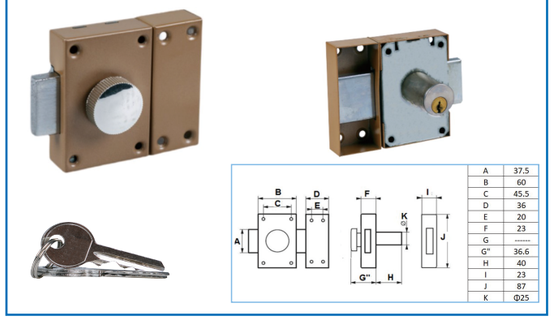

A	37.5
B	60
C	45.5
D	36
E	20
F	23
G	------
G"	36.6
H	40
I	23
J	87
K	Φ25

BS-JH- ECO-404

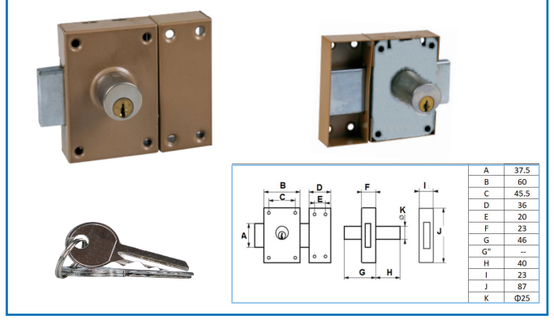

A	37.5
B	60
C	45.5
D	36
E	20
F	23
G	46
G"	--
H	40
I	23
J	87
K	Φ25

BS-JH-558

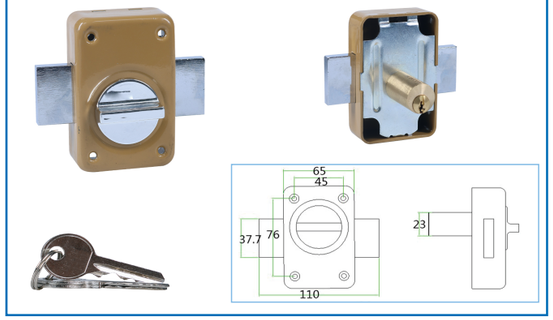

BS-JH-136

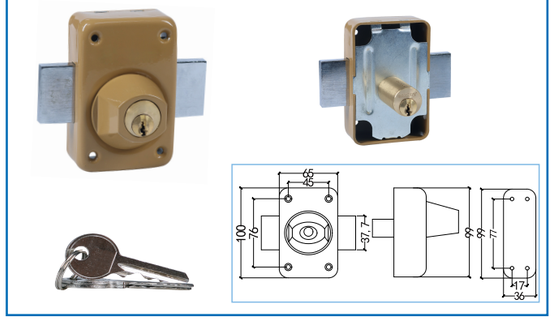

BS-JH-7632

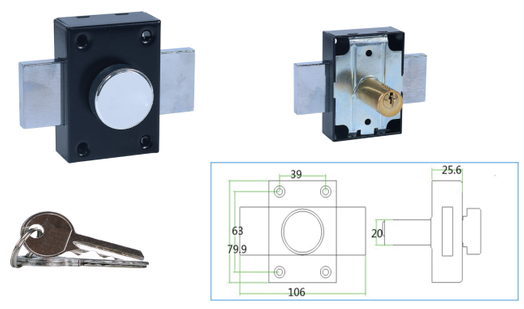

BS-JH-101

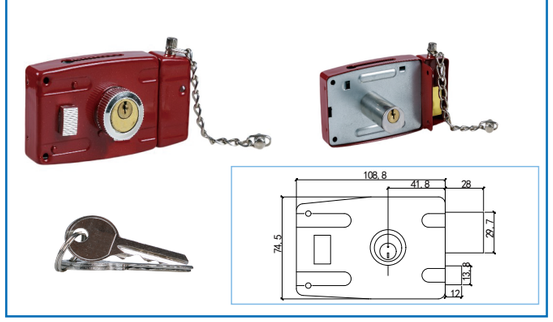

BS-JH-111B

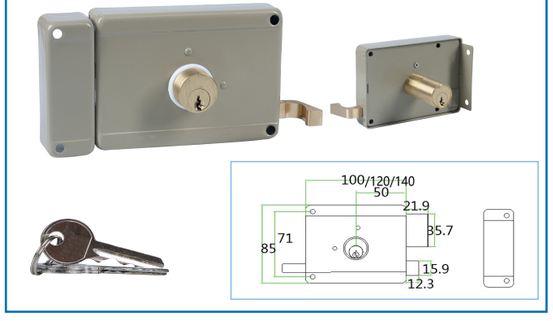

BS-JH-111C

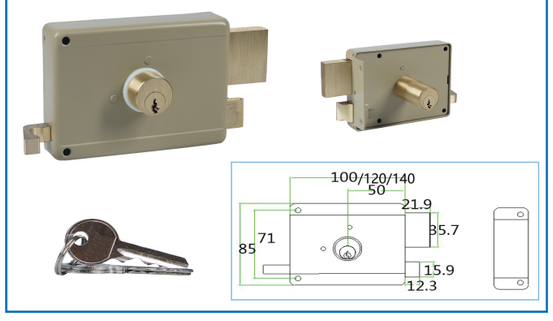

BS-JH-111B.12 split

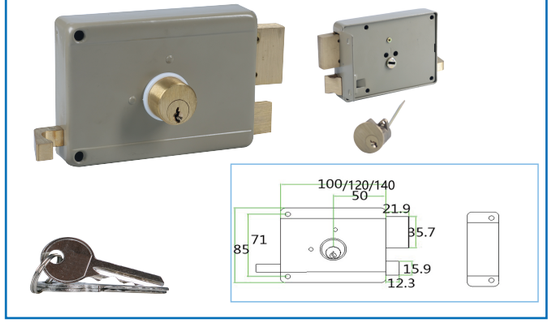

BS-JH -111B-computer key

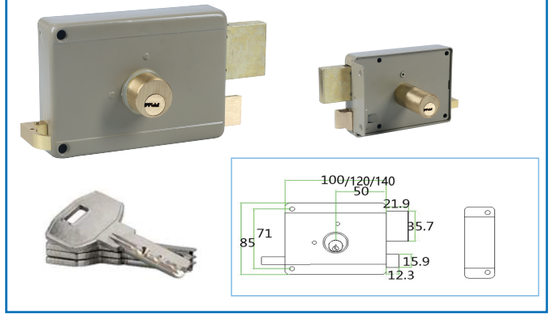

Lock For Door

Product

BS-JH-111 Greece Type

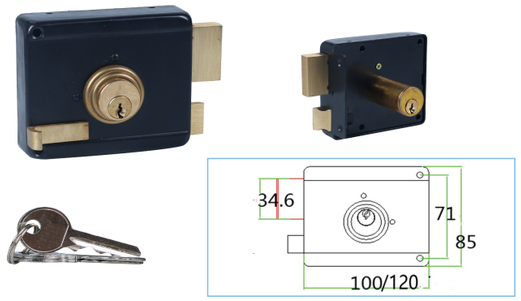

BS-JH-210

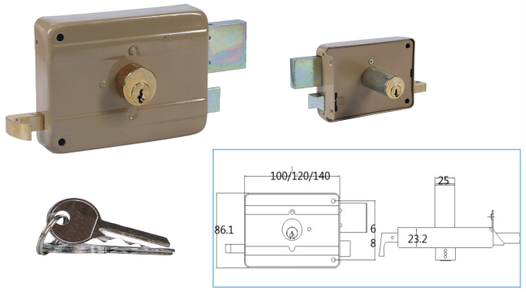

BS-JH-9710

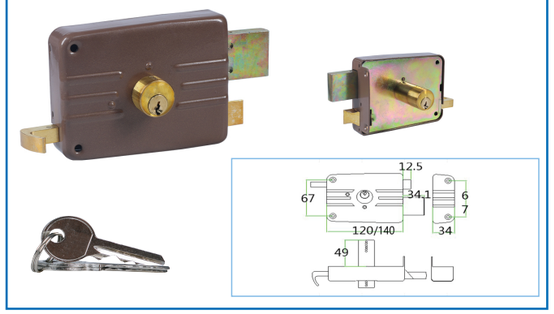

BS-JH-9710.B

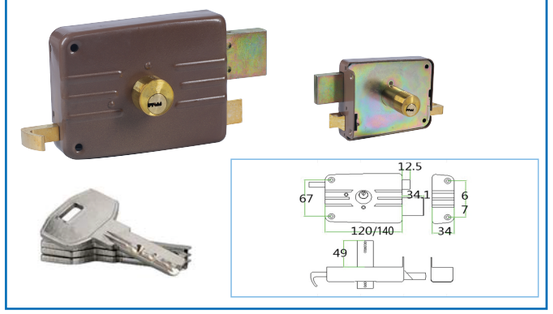

BS-JH-540

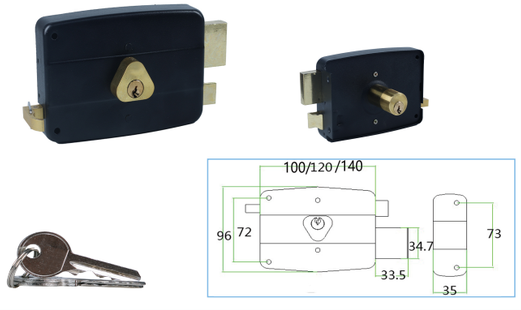

BS-JH-540.B

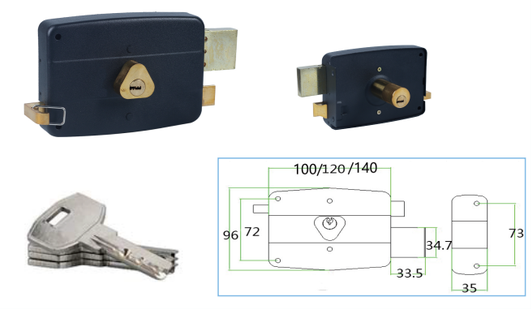

BS-JH-540 updated type

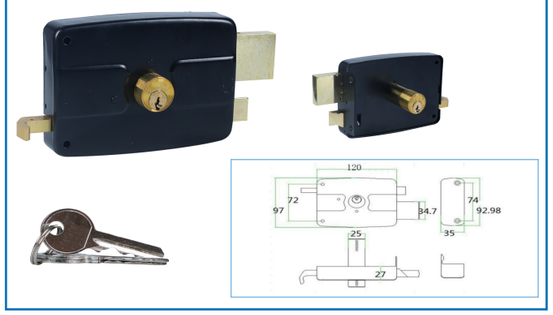

BS-JH-540.B updated type

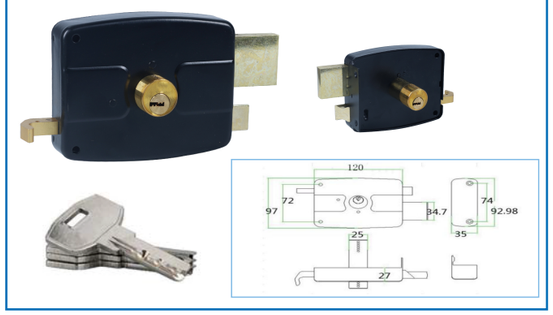

BS - JH-540-3M

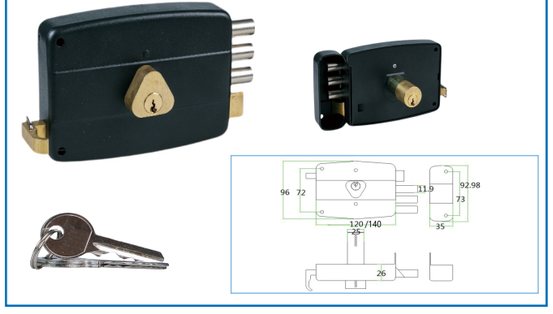

BS-JH-540.14AG

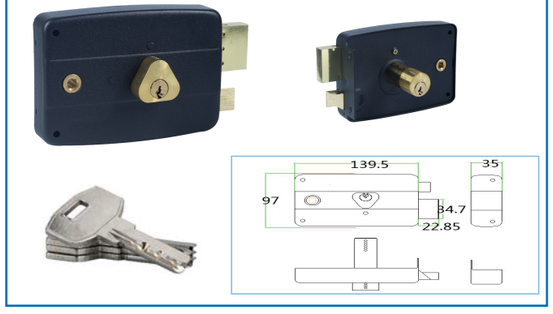

BS- ZX-1910

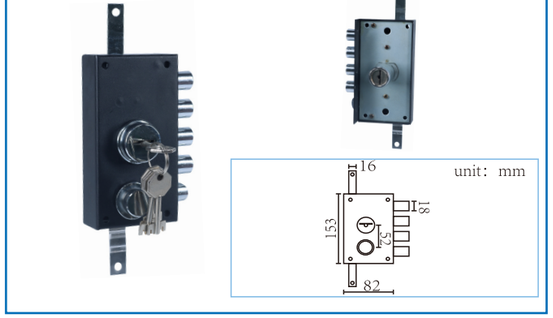

BS-ZX-1710

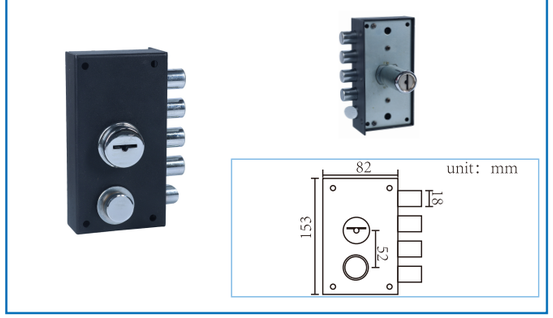

Lock For Door

Product

BS-TA-D013

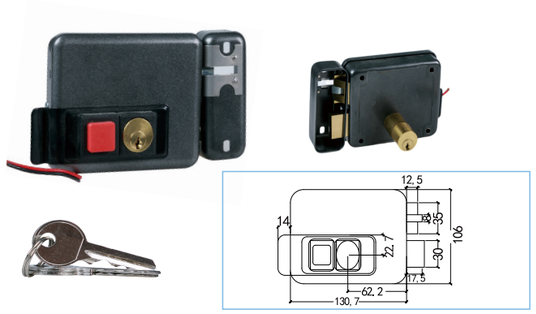

BS-JH-2020

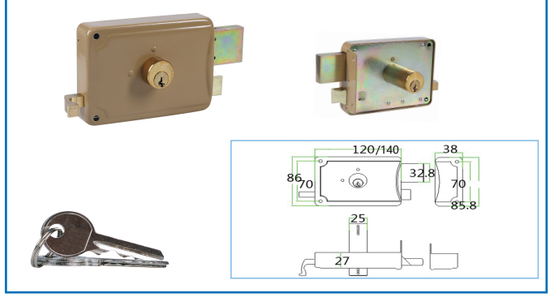

BS-JH-2020 split

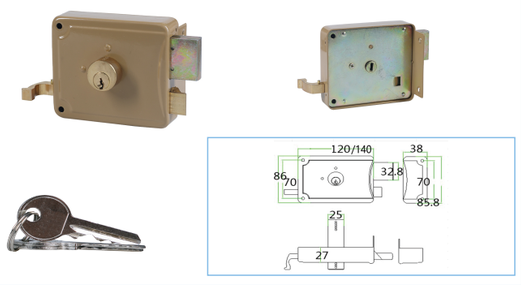

BS-JH-2020.B

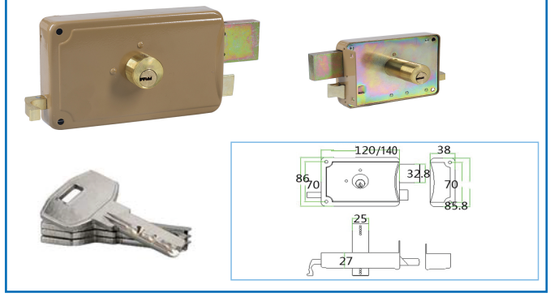

BS-JH-540.E

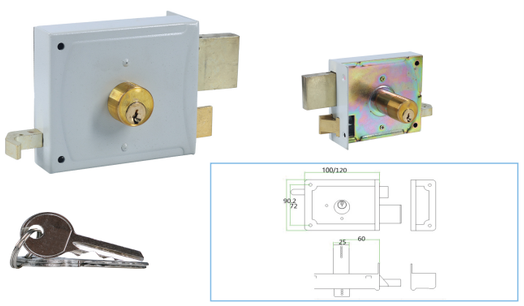

BS-JH-540.EB

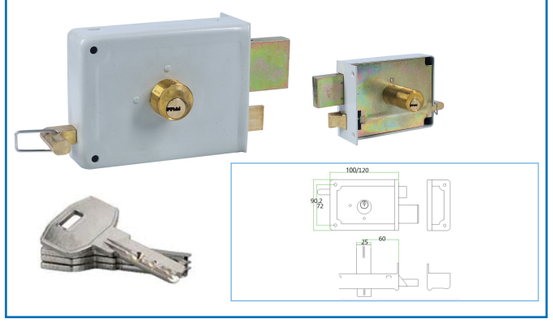

BS-JH-6682

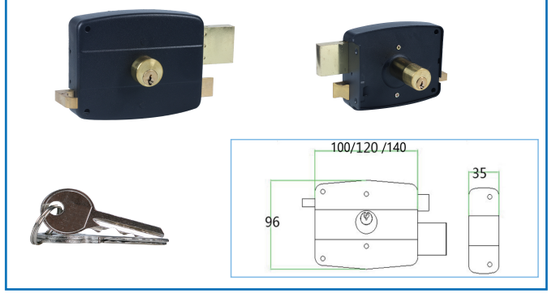

BS-JH-927

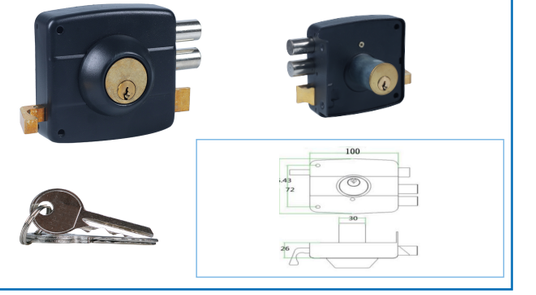

BS-JH-6682B

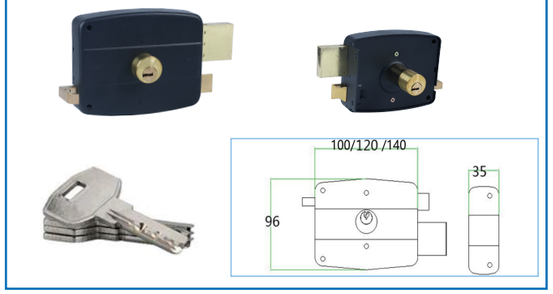

BS-JH-629

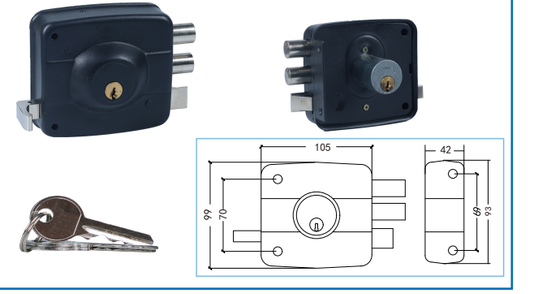

BS-JH-Chile 30

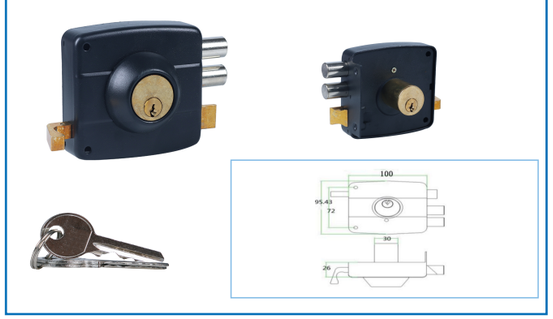

BS-JH-675B

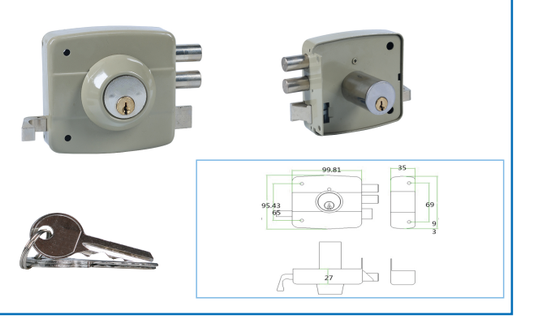

Product

Lock For Door

BS-JH-370 straight case

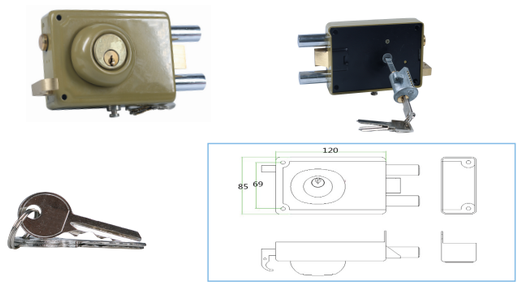

BS-JH-375

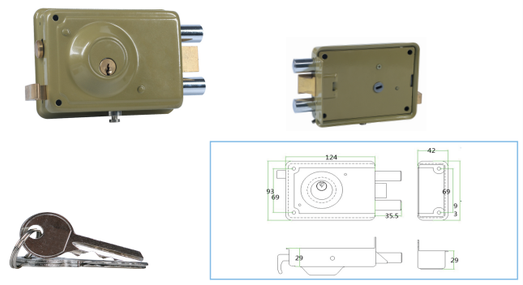

BS-JH-370 cured edge

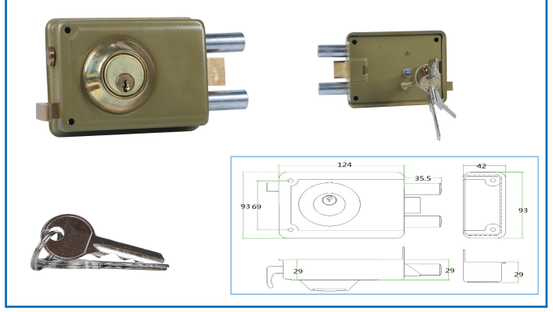

BS-JH-372

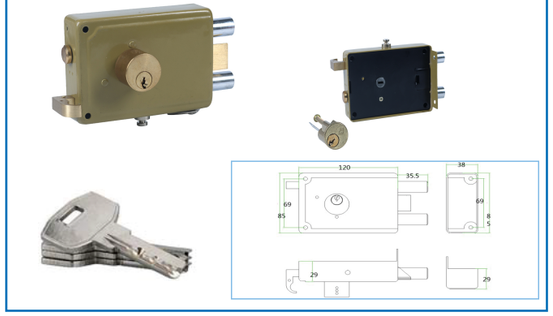

BS-JH-376

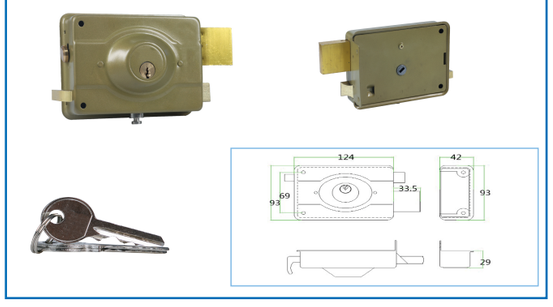

BS-JH-P60 without wing



BS-JH-P61

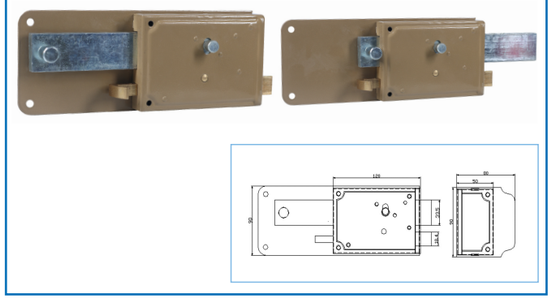

BS-JH-P60-1 without wing

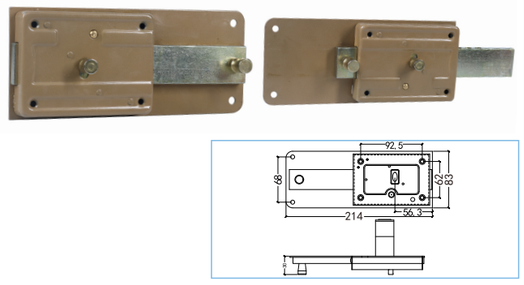

BS-JH-2002

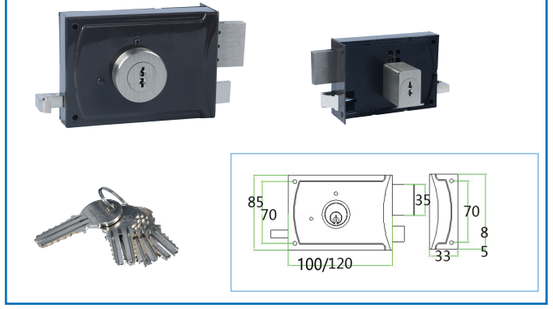

BS-JH-2000 cross key way

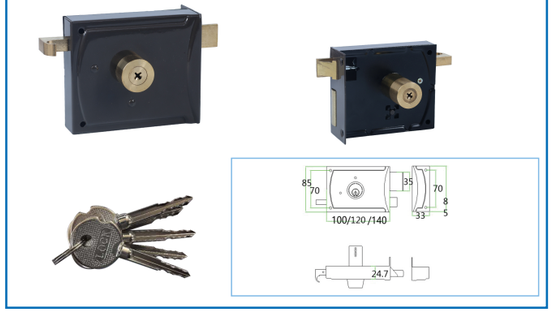

BS-JH-2000

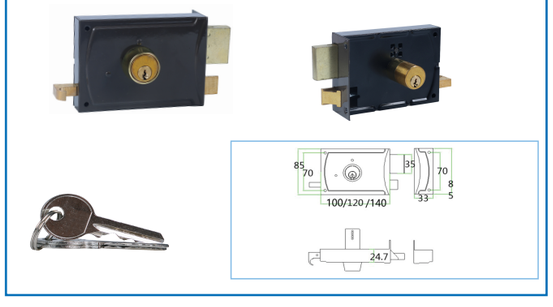

BS-JH-2001

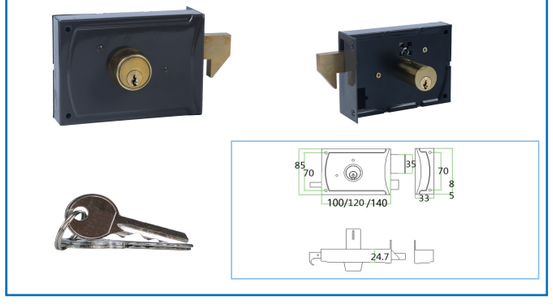

Product

Lock For Door

BS-JH-731-50

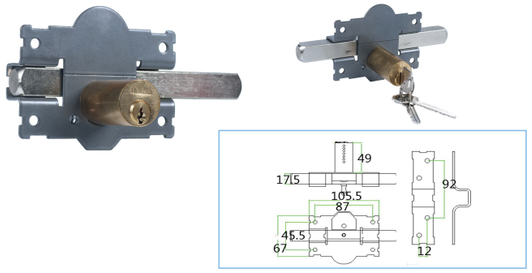

BS-HD-564-split type

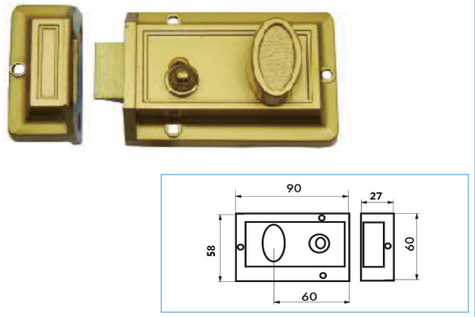

BS-JH-730-50

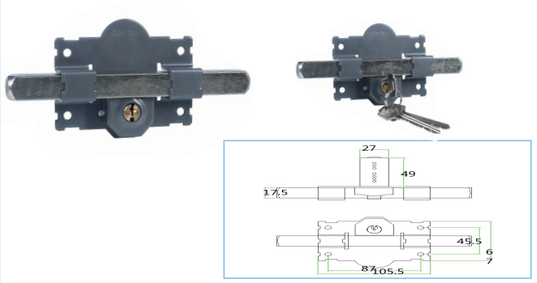

BS-WH-Rolling lock

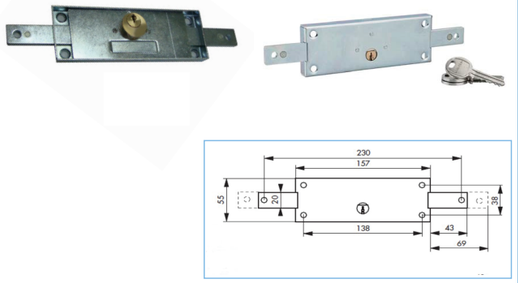

BS-JH-2930

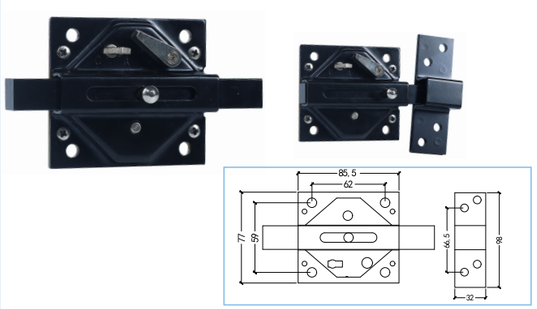

BS-WS-MF603-5-split type



Cylinder Body

Euro profile cylinder S groove/computer cylinder



Available stator:
Aluminium/Zamak/Brass

Available profile size:
32.5/32.8/33mm

Cylinder with Construction key A&B

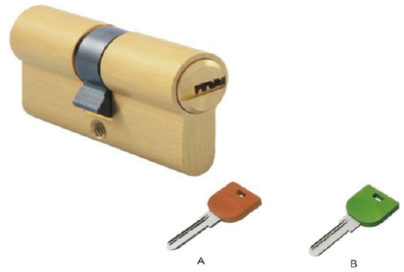

Cylinder with Anti–panic function



Cylinder with Anti–snap function



Oval cylinder



Key type



Product

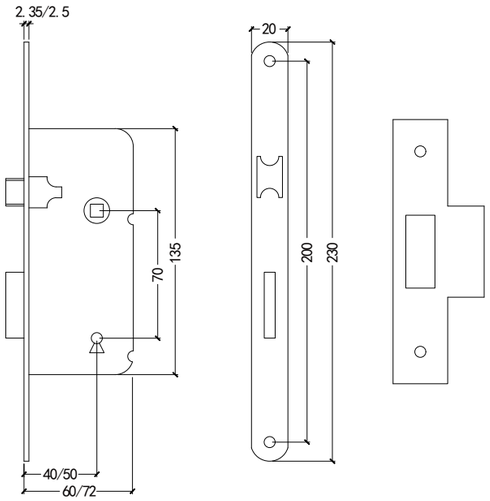

BS–240CW–WITHOUT HOLE



Backset	Center Distance
40	70
50	70

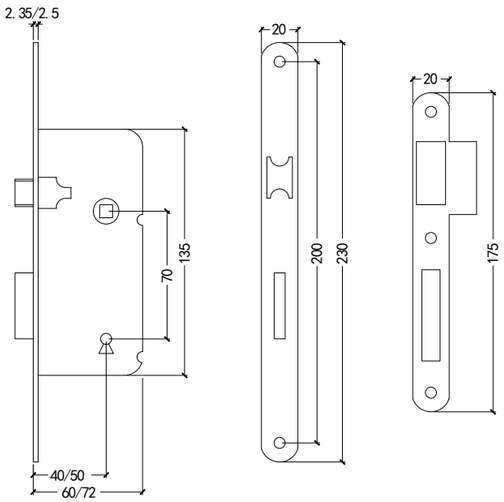

BS–240CW–BATHROOM HOLE



Backset	Center Distance
40	70
50	70

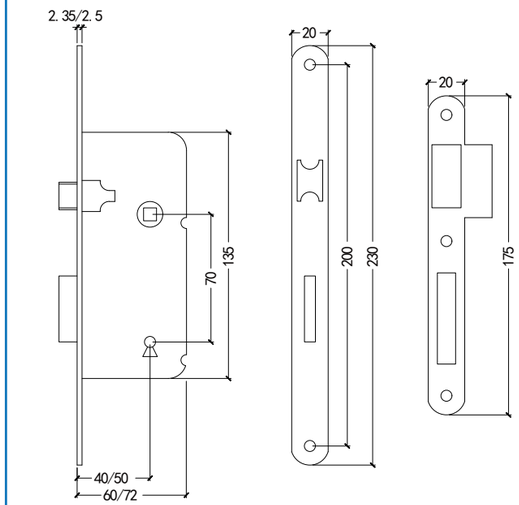

BS–240CW–KEY HOLE



Backset	Center Distance
40	70
50	70

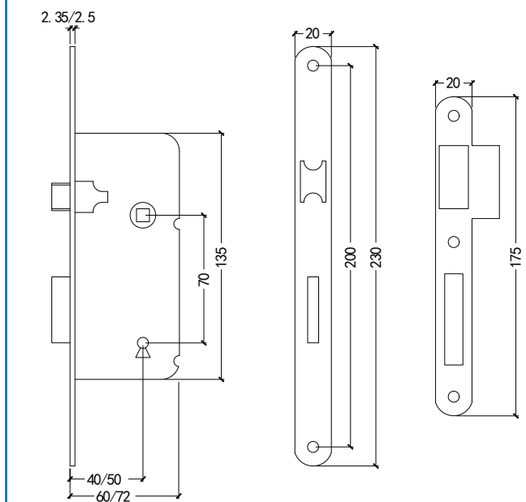

BS–240CW–CYLINDER HOLE



Backset	Center Distance
40	70
50	70

Product

Lock Body

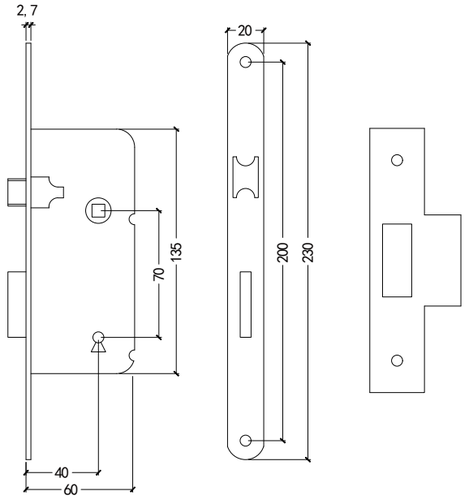

BS–240–WITHOUT HOLE



Backset	Center Distance
40	70

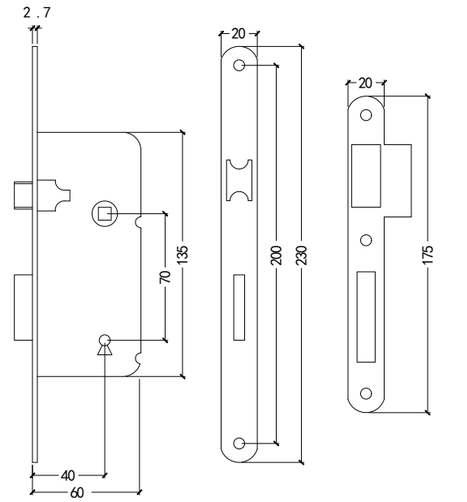

BS–210

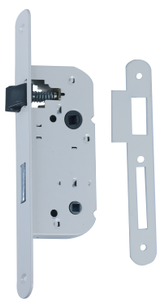

Backset	Center Distance
40	70

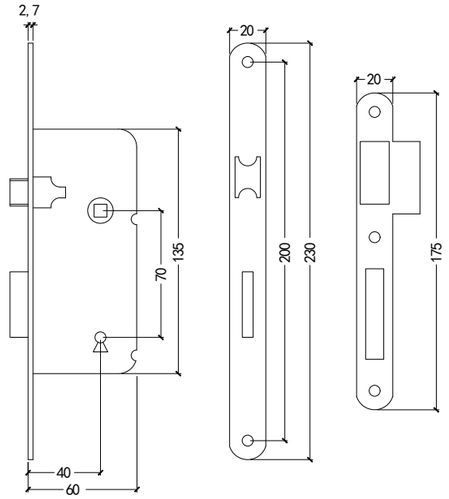

BS–240



Backset	Center Distance
40	70

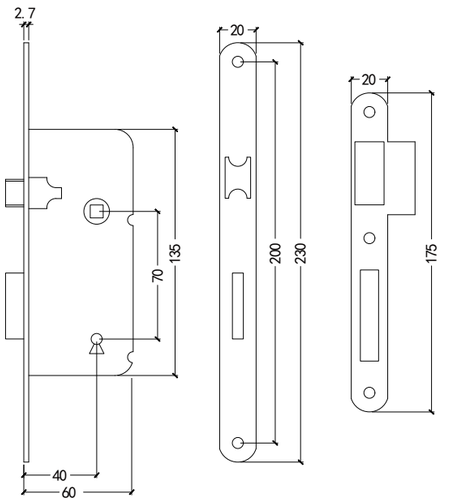

BS–260



Backset	Center Distance
40	70

Lock Body

Product

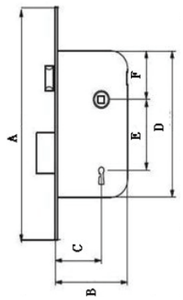

A	230	230
B	68	78
C	40	50
D	148	148
E	70	70
F	50	50

BS–310–KEY HOLE



Backset	Center Distance
40	70
50	70

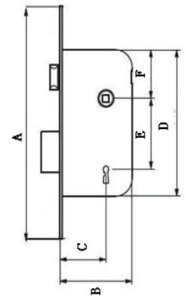

A	230	230
B	68	78
C	40	50
D	148	148
E	70	70
F	50	50

BS–310–BATHROOM HOLE



Backset	Center Distance
40	70
50	70

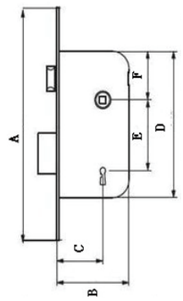

A	230	230
B	68	78
C	40	50
D	148	148
E	70	70
F	50	50

BS–310–CYLINDER HOLE



Backset	Center Distance
40	70
50	70

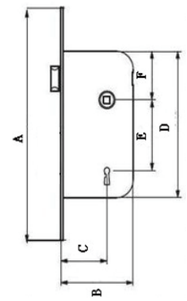

A	230	230
B	68	78
C	40	50
D	148	148
E	70	70
F	50	50

BS–310–WITHOUT SQUARE BOLT



Backset	Center Distance
40	70
50	70

Product

Lock Body

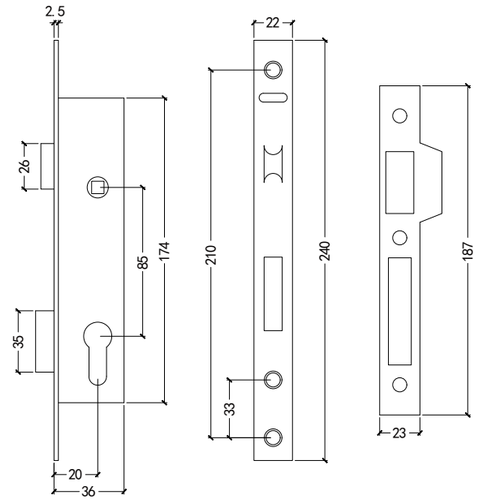

BS–8520



Backset	Center Distance
20	85

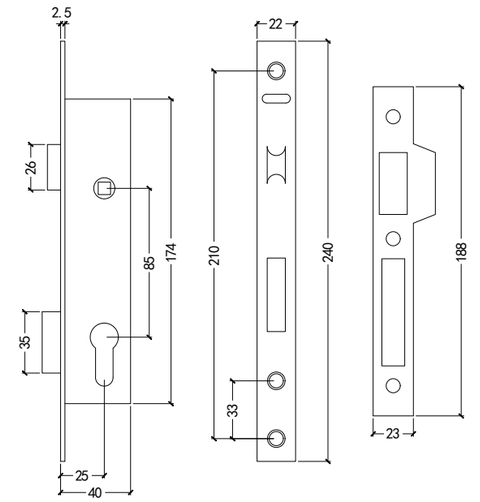

BS–8525



Backset	Center Distance
25	85

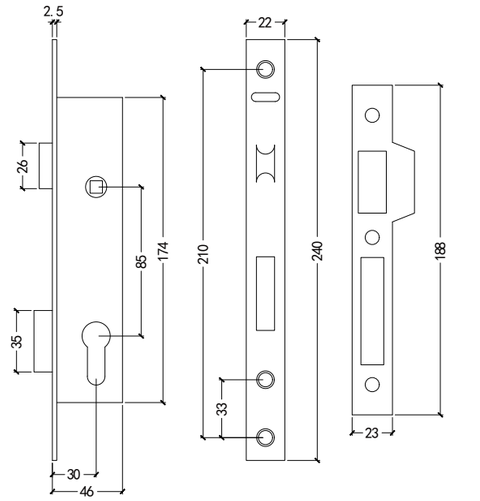

BS–8530



Backset	Center Distance
30	85

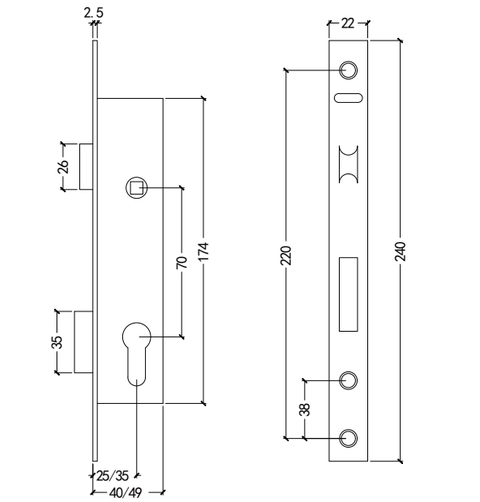

BS–7025/BS–7035



Backset	Center Distance
25	70
35	70

Product

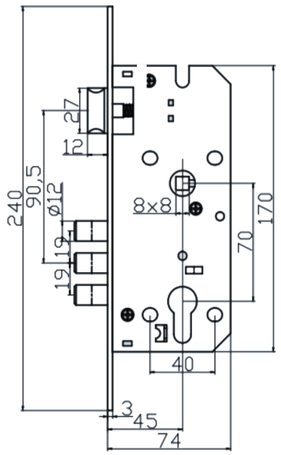

BS–S7045–3R



Backset	Center Distance
45	70

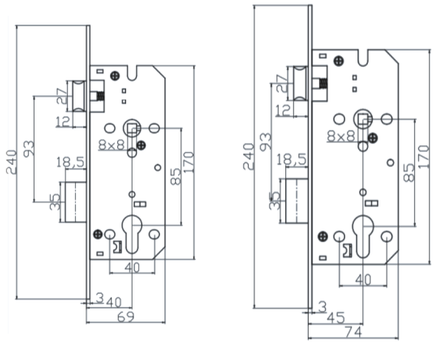

BS–S8540/BS–S8545



Backset	Center Distance
40	85
45	85

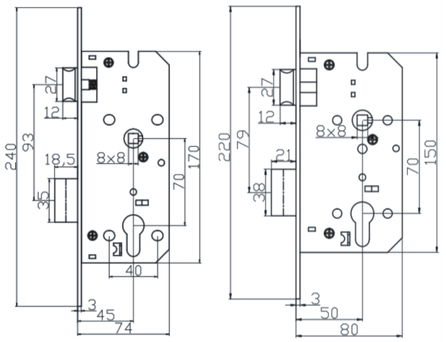

BS–S7045/BS–S7050



Backset	Center Distance
45	70
50	70

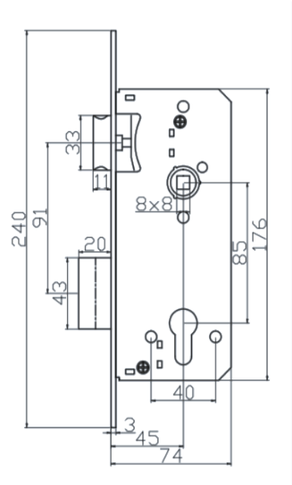

BS–S9034



Backset	Center Distance
45	85

Product

Lock Body

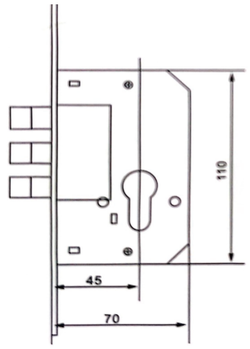

BS–189–3M



Backset	Center Distance
45	

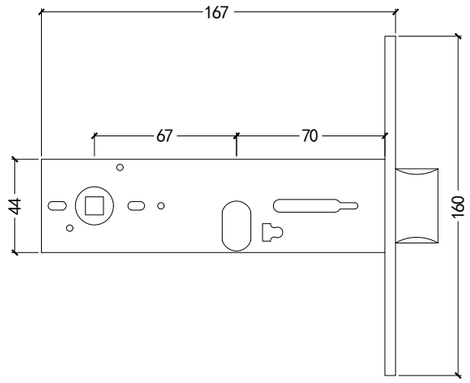

BS–770B



Backset	Center Distance
70	67

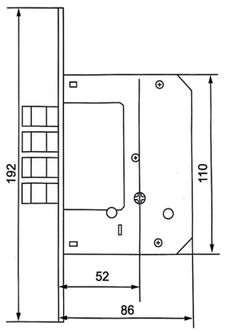

BS–189–4MS



Backset	Center Distance
52	

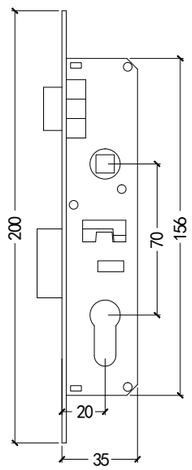

BS–720S



Backset	Center Distance
20	70

Product

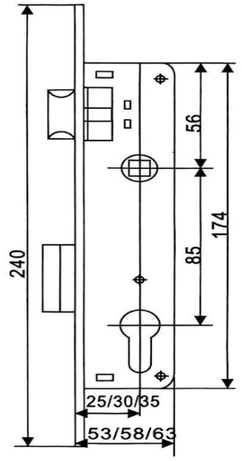

BS–725/BS–730/BS–735



Backset	Center Distance
25	85
30	85
35	85

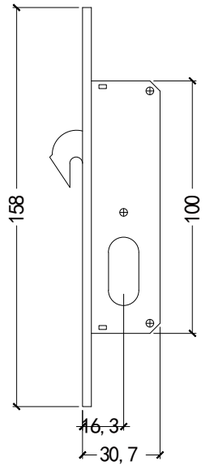

BS–1018



Backset	Center Distance
16.3	

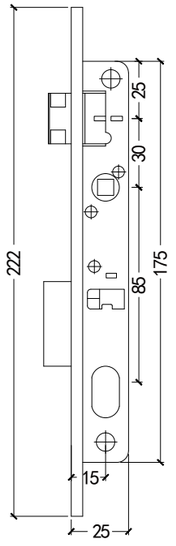

BS–7704



Backset	Center Distance
15	85

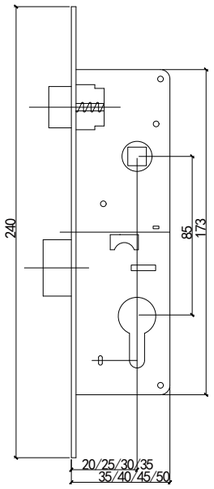

BS–90120A



Backset	Center Distance
20	85

Product

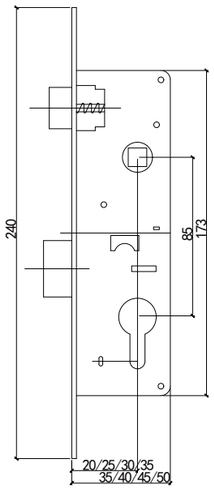

BS–91130



Backset	Center Distance
20	85

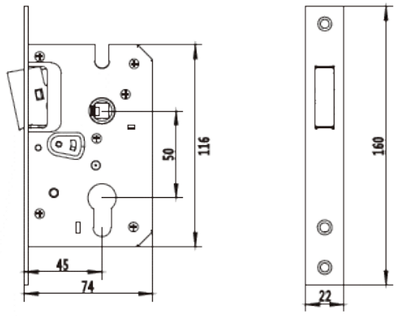

BS–5045–magnet



Backset	Center Distance
45	50

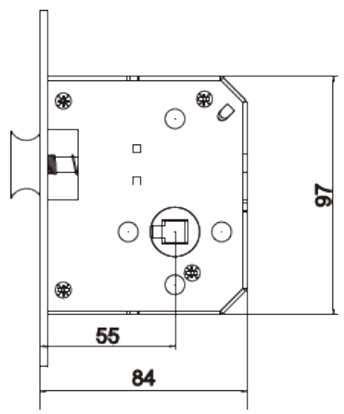

BS–55L



Backset	Center Distance
55	

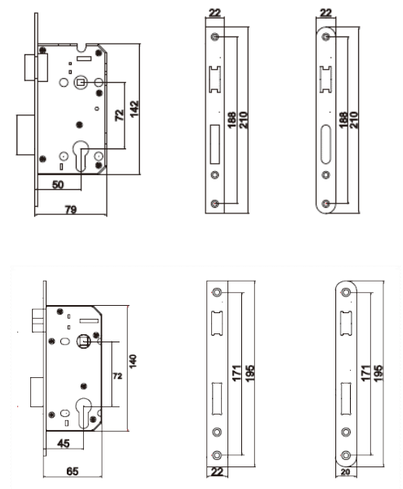

BS–7245/BS–7250



Backset	Center Distance
45	72
50	72

Product

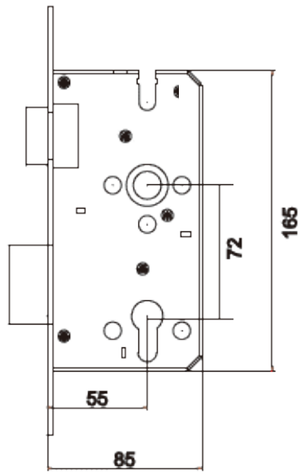

BS–7255–10



Backset	Center Distance
55	72

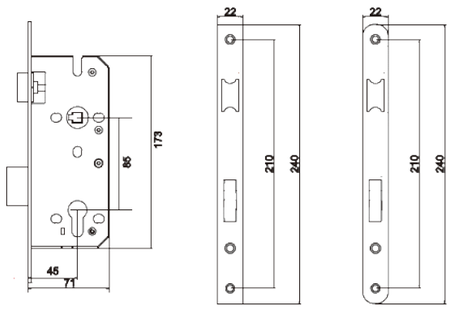

BS–8545–03



Backset	Center Distance
45	85

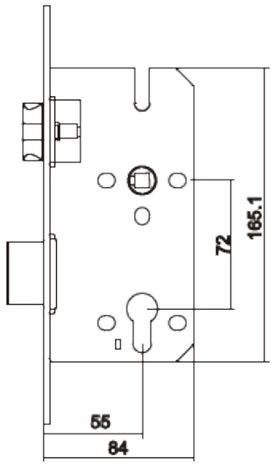

BS–7255–nylon



Backset	Center Distance
55	72

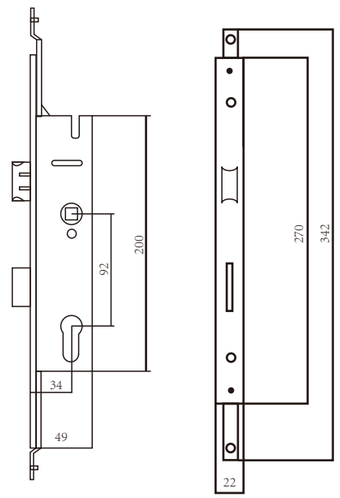

BS–9234



Backset	Center Distance
34	92

Product

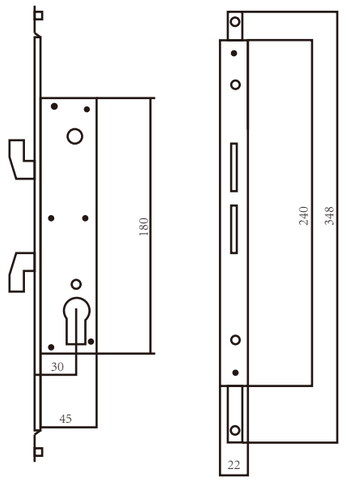

BS–130–30



Backset	Center Distance
30	130

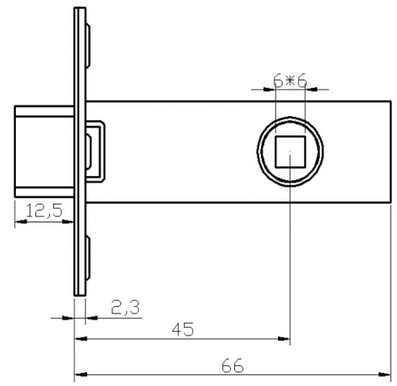

BS–C–03A

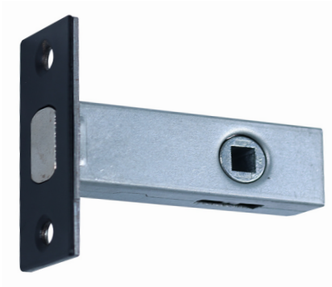

Backset	Center Distance
45	

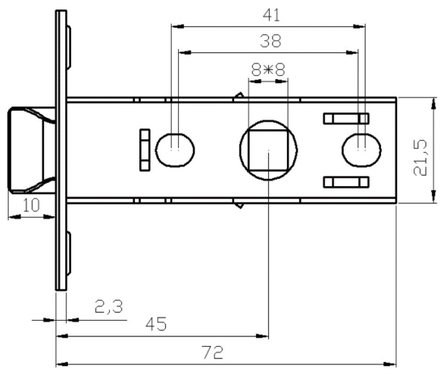

BS–C–03B



Backset	Center Distance
45	

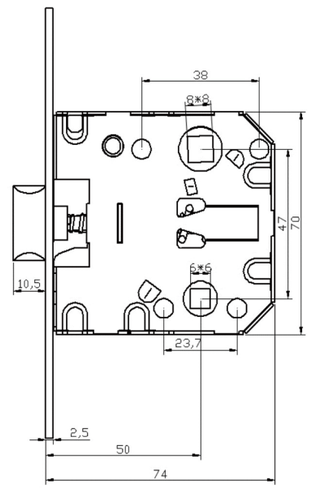

BS–PE47

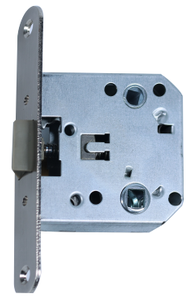

Backset	Center Distance
50	47

Product

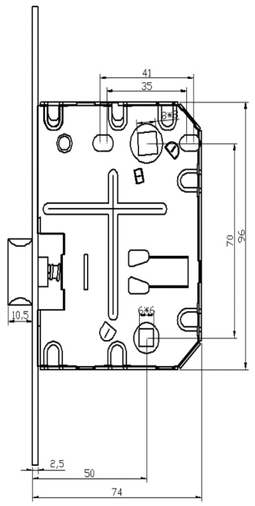

BS–PE70



Backset	Center Distance
50	70

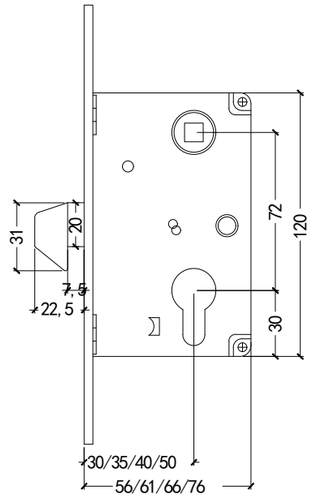

BS–S001



Backset	Center Distance
30	72
35	72
40	72
50	72

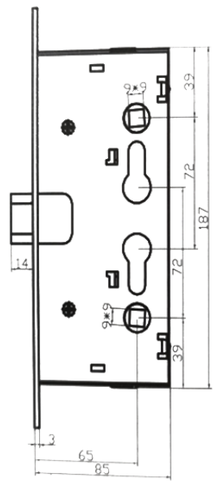

BS–J530–T



Backset	Center Distance
65	72

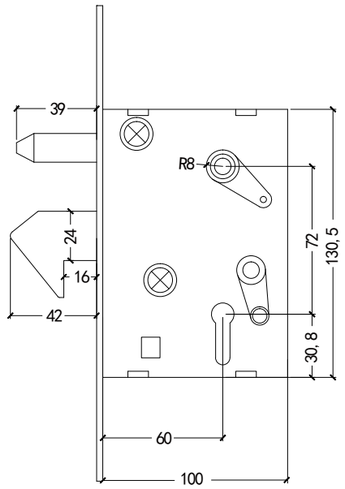

BS–C001



Backset	Center Distance
60	72

Product

Lock Body

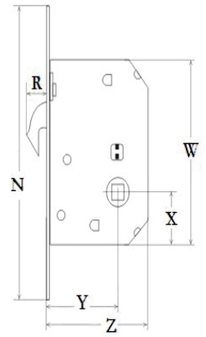

N	160
R	17.5
W	100
X	29
Y	50
Z	69

BS–K48



Backset	Center Distance
50	

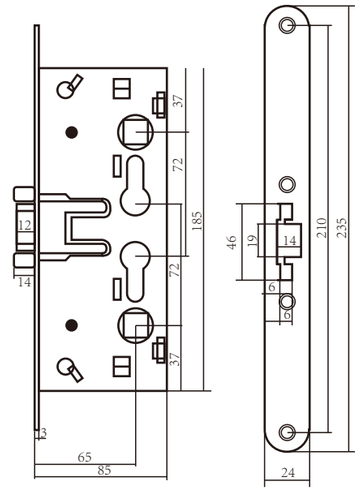

BS–1739



Backset	Center Distance
65	72

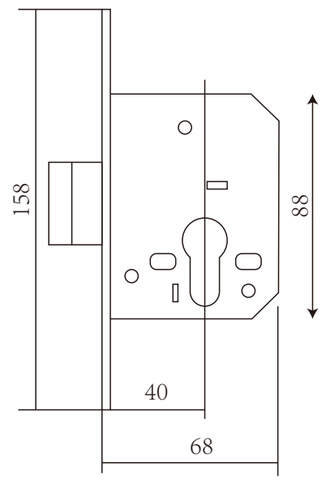

BS–9112



Backset	Center Distance
40	

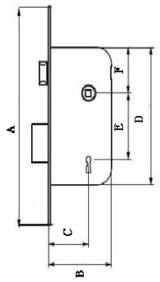

	40mm	50mm
A	196	196
B	69	78
C	40	50
D	129	129
E	47	47
F	54	54

BS–2110



Backset	Center Distance
40	47
50	47

Product

Lock Body

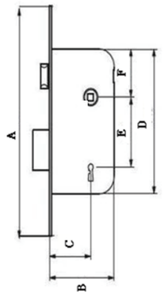

	SIZE
A	241
B	80
C	50
D	175
E	85
F	55

BS–2130



Backset	Center Distance
50	85

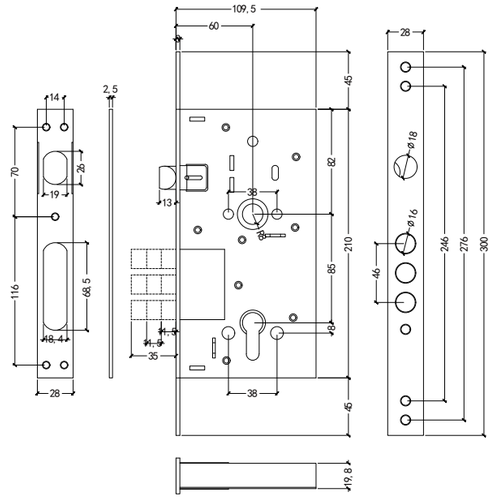

BS–252RL–C



Backset	Center Distance
60	85

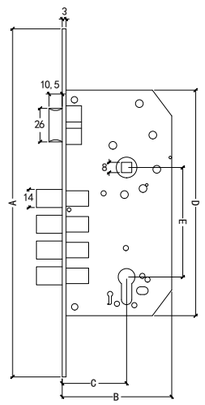

A	270	270
B	79	89
C	50	60
D	175	175
E	85	85

BS–3201B

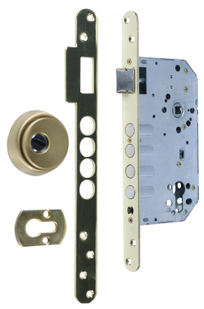

Backset	Center Distance
50	85
60	85

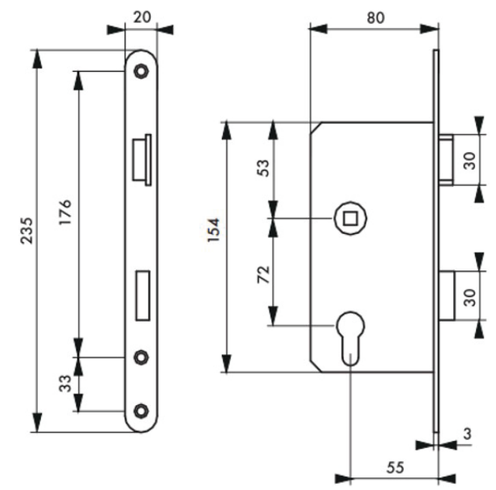

BS–5572

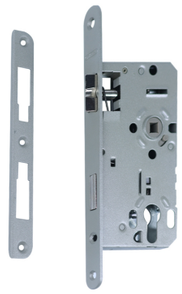

Backset	Center Distance
55	72

Product

Lock Body

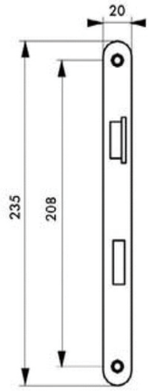

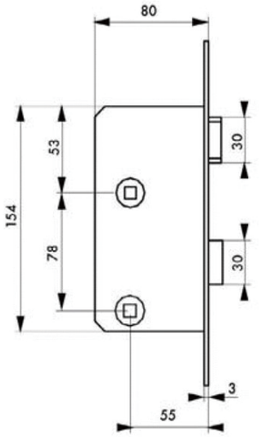

BS–5578

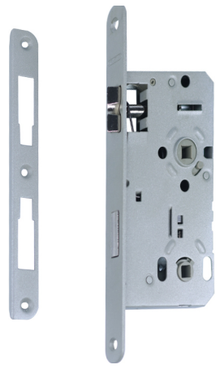

Backset	Center Distance
55	78

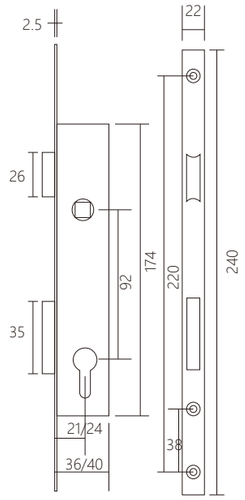

BS–9221/BS–9224



Backset	Center Distance
21	92
24	92

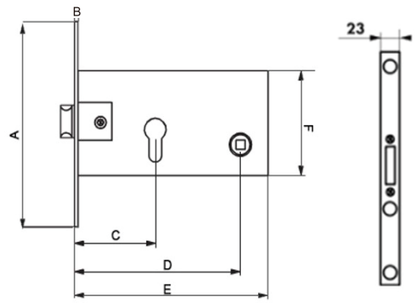

A	138
B	2.5
C	60
D	126
E	138
F	62

BS–727



Backset	Center Distance
60	66

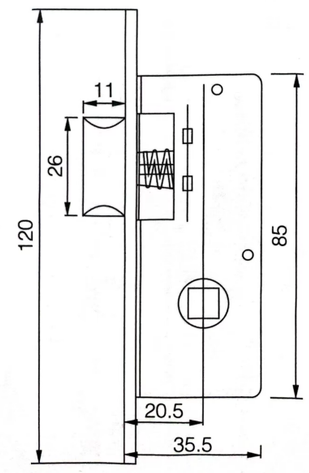

BS–603



Backset	Center Distance
20.5	

Product

Handle For Door

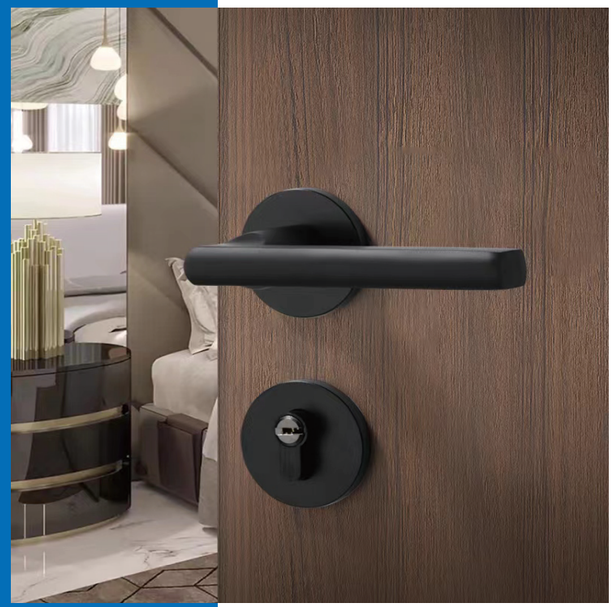

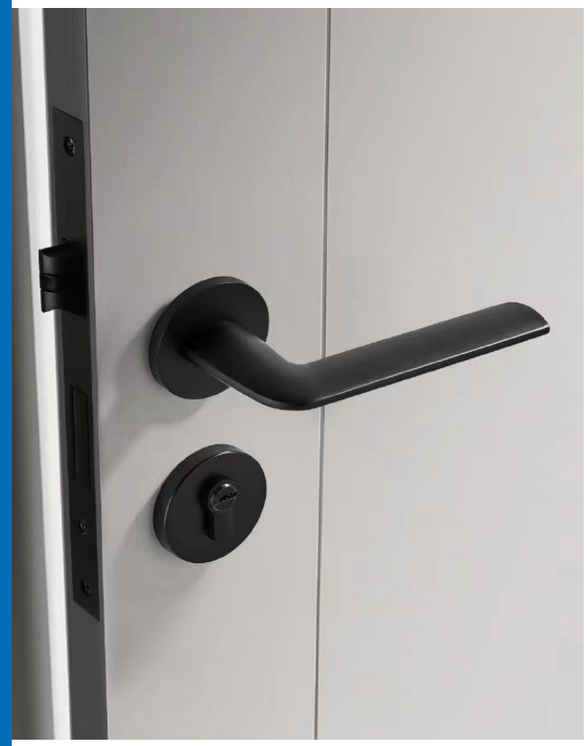

BS-YH-CE01

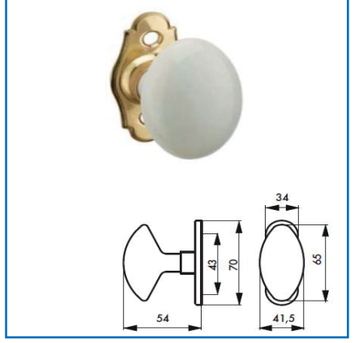

BS-YH-CE02

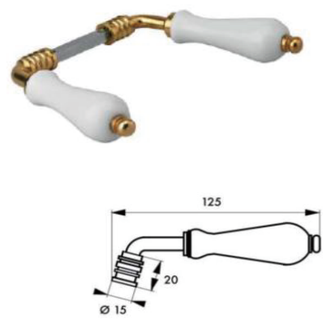

BS-YH-CE03

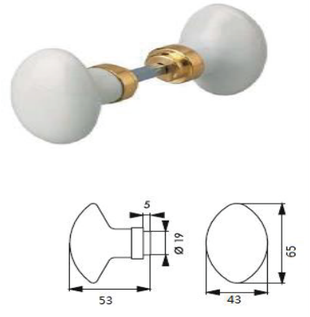

BS-YH-ZT

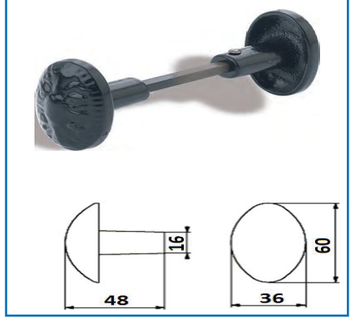

BS-YH-TY01

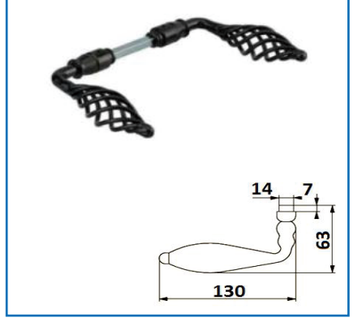

BS-YH-TY02

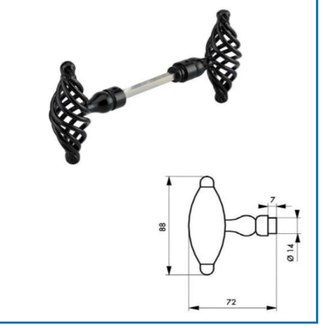

BS-YH-TY03

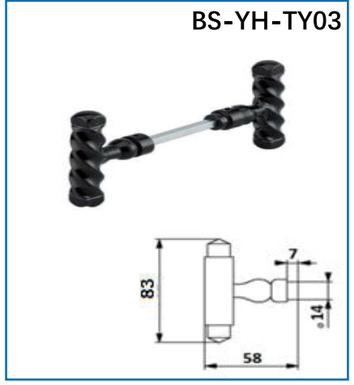

BS-ST-3353

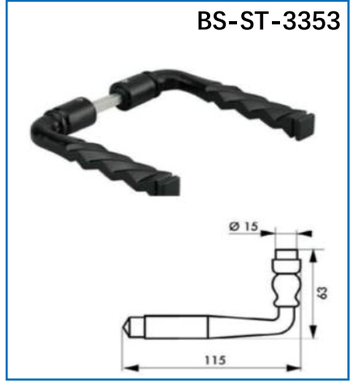

BS-ST-3263



Product

Handle For Door

BS-ST-218

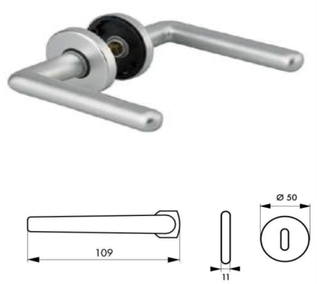

BS-ST-3363

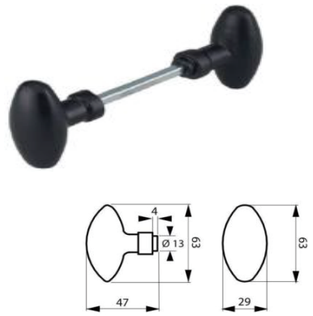

BS-JF-L02

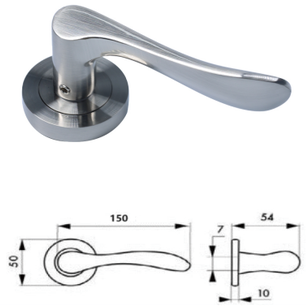

BS-JF-L211



BS-JF-L271

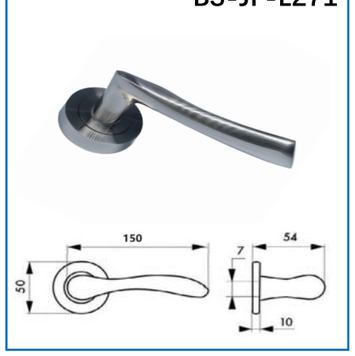

BS-JF-L048

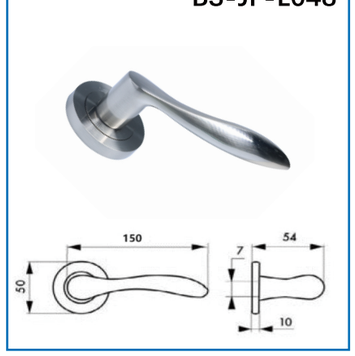

BS-JF-L002

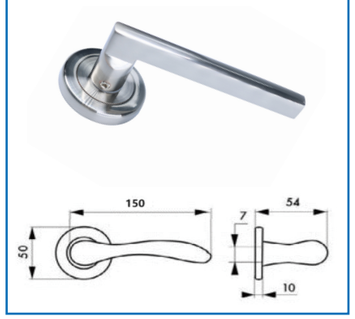

BS-JF-L345



BS-JF-L045



BS-TS-602AL028B

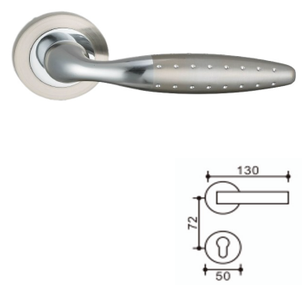

BS-TS-602AL062

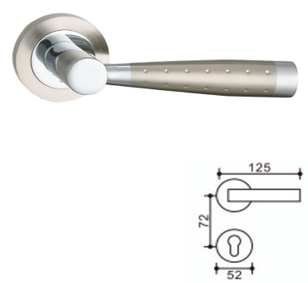

BS-TS-602AL103

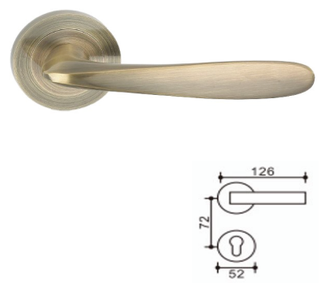

BS-TS-602AL148



BS-TS-602AL272



BS-TS-604AL271

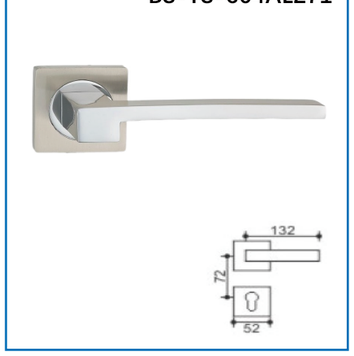

BS-TS-602AL292

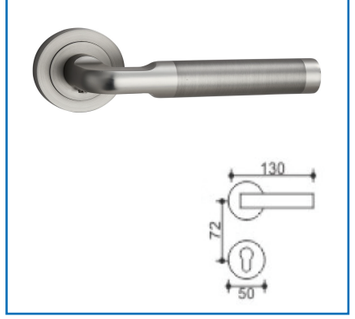

BS-TS-609AL190

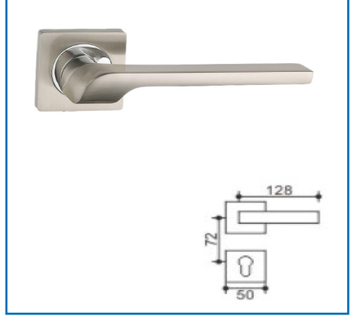

BS-TS-619AL332

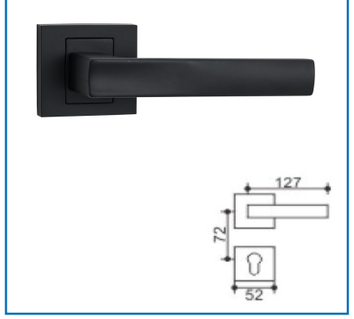

Product

Handle For Door

BS-TS-620AL282

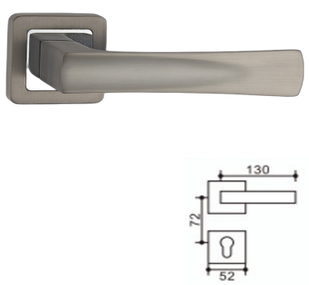

BS-TS-620AL285

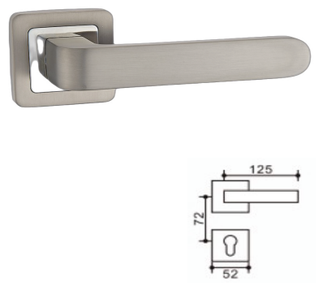

BS-TS-625AL161

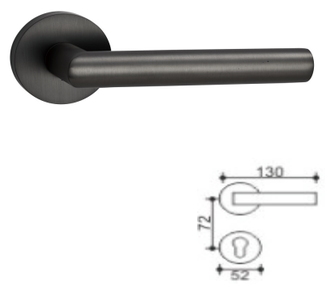

BS-TS-641AL271

BS-TS-602179

BS-TS-I603AL217

BS-TS-I614AI233

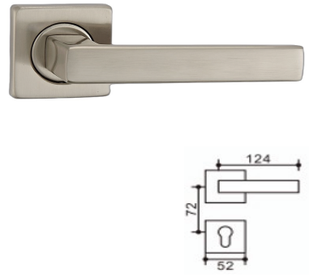

BS-TS-603269

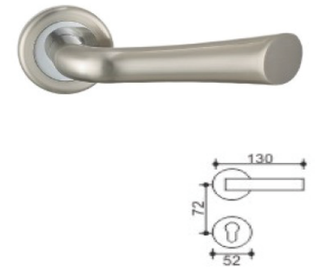

BS-TS-609267

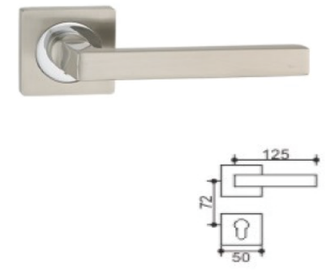

BS-JF-L090

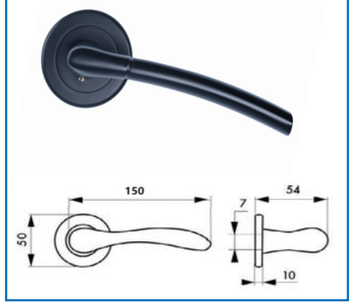

BS-JF-L131



BS-JF-L344



BS-LX-A004

BS-LX-A019

BS-JF-SS01

BS-WY-S051

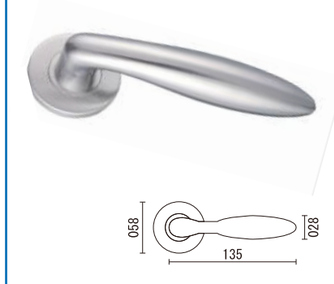

BS-JL-JS053



BS-JL-JQ202

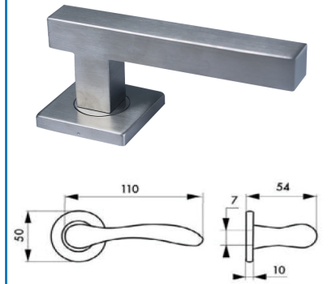

Product

Handle For Door

BS-FH-Z17-E21



BS-FH-Z05-E21

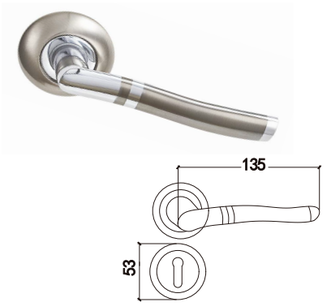

BS-FH-Z17-E242



BS-FH-Z17-Z208

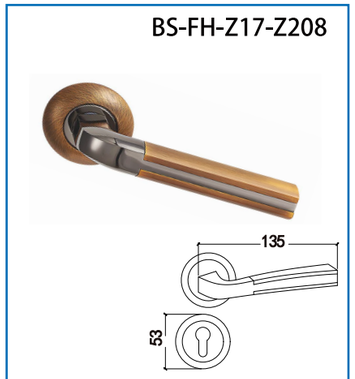

BS-FH-Z17-Z24

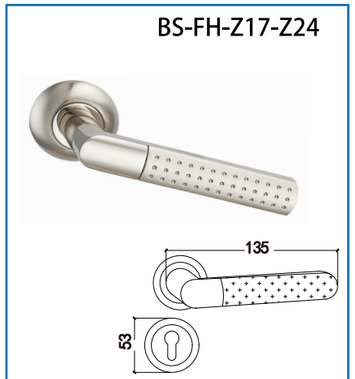

BS-FH-Z05-Z109



BS-FH-Z17-Z02

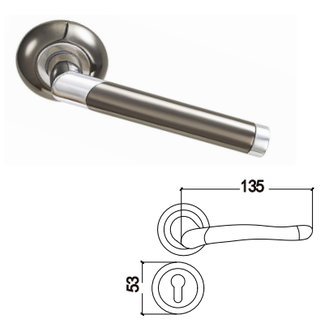

BS-FH-Z28-Z221

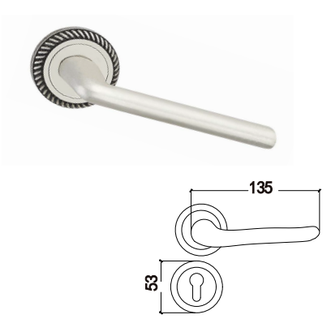

BS-FH-Z17-Z04



BS-FH-Z25-Z03

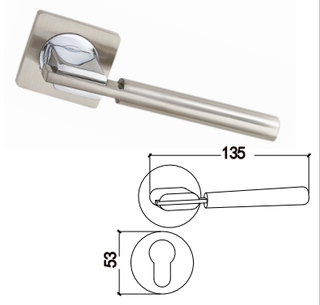

BS-FH-Z25-Z193

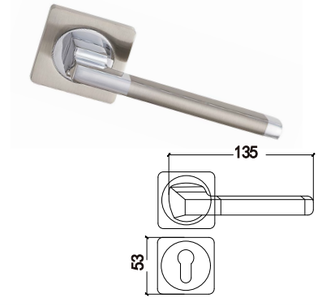

BS-FH-Z25-Z249

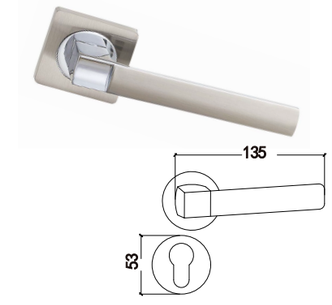

BS-FH-Z25-Z83

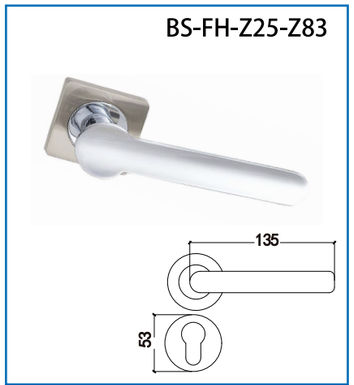

BS-FH-Z25-Z243

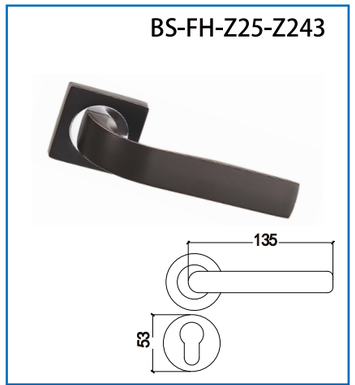

BS-FH-Z16-E138

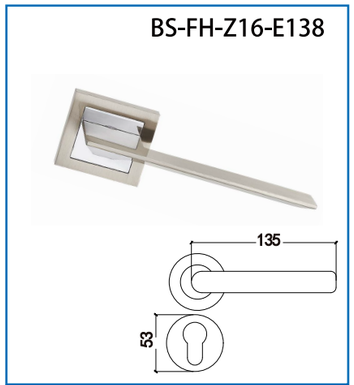

BS-FH-Z07-E88-A

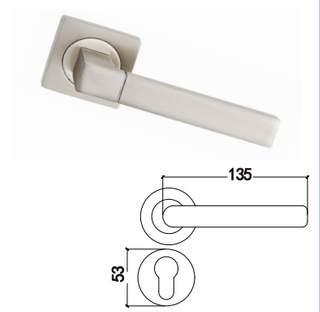

BS-FH-Z25-E197

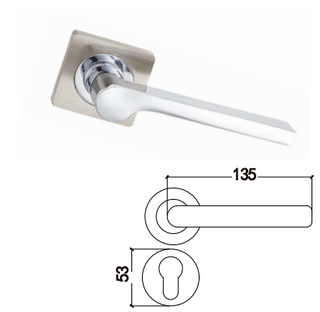

BS-FH-Z25-Z78

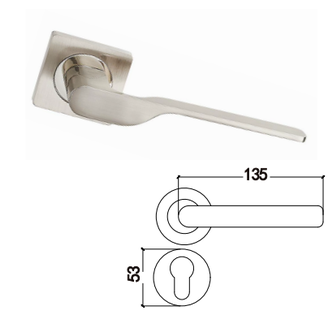

Product

Handle For Door

BS-WY-101



BS-WY-102

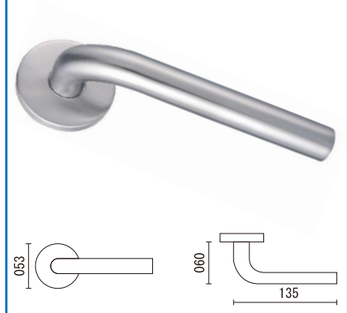

BS-WY-103



BS-WY-104

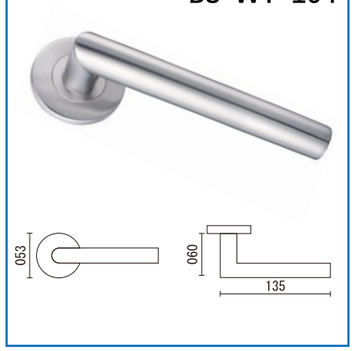

BS-WY-104-1



BS-WY-105

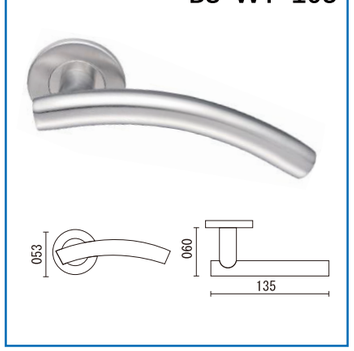

BS-WY-108



Aluminium rosace

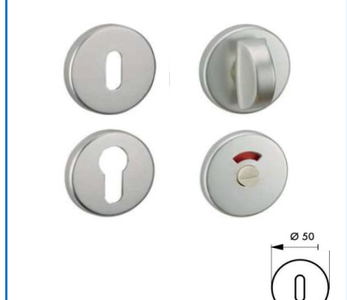

Stainless steel rosace



BS-ST-21803

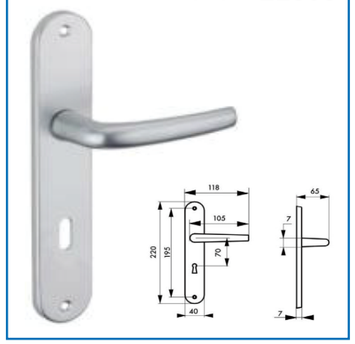

BS-ST-8803-4

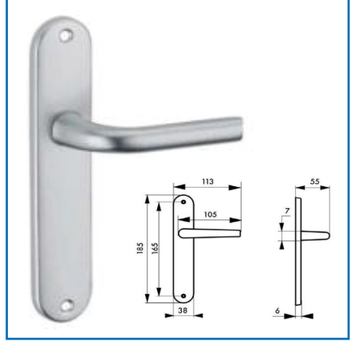

BS-ST-3410

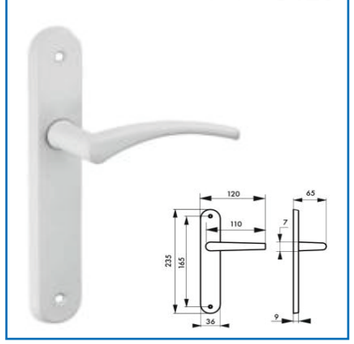

BS-ST-107



BS-ST-215012



BS-ST-8013

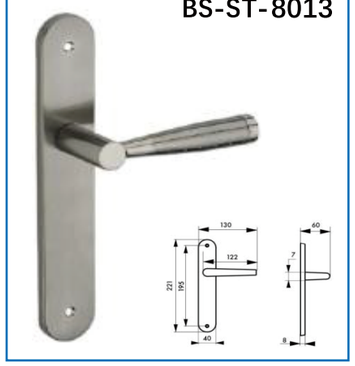

BS-ST-416

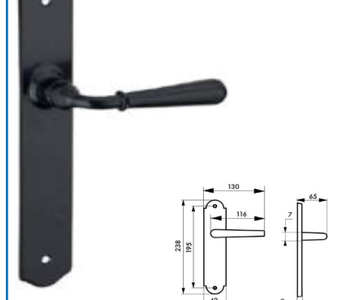

BS-ST-168803



BS-ST-9103



Product

Handle For Door

BS-ST-249

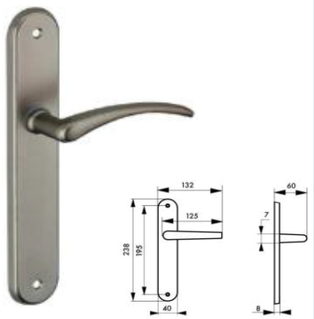

BS-ST-61570



BS-ST-422

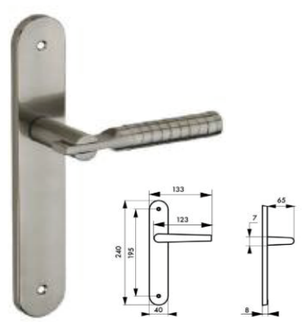

BS-ST-R36

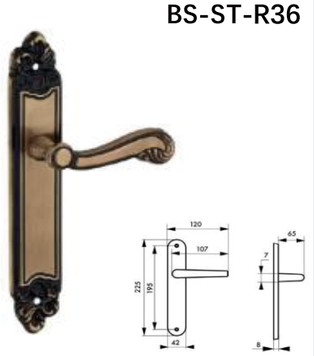

BS-JF-Z37

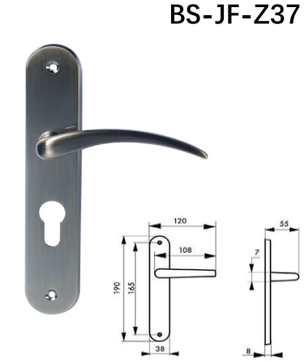

BS-JF-L211

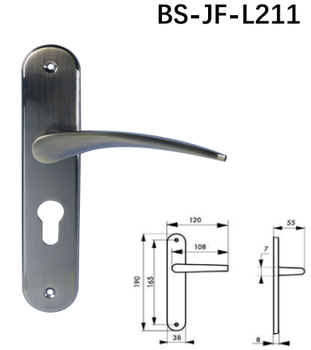

BS-ST-8806-D

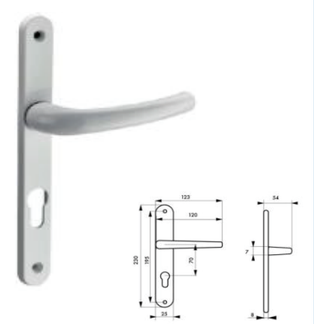

BS-MS-W01

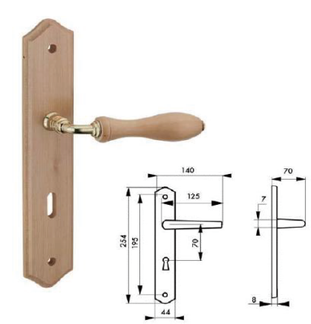

BS-MS-W02

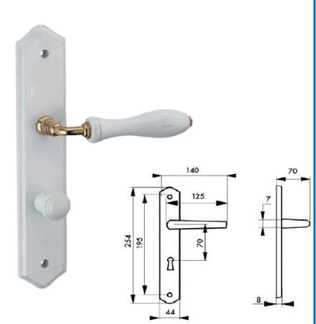

BS-JF-Z324

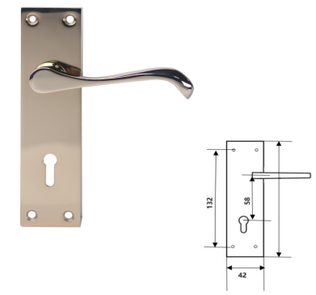

BS-JF-Z417

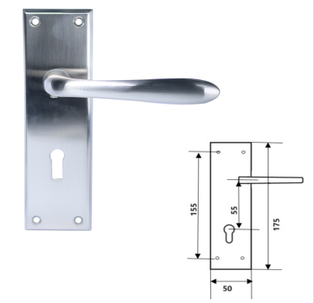

BS-JF-Z325

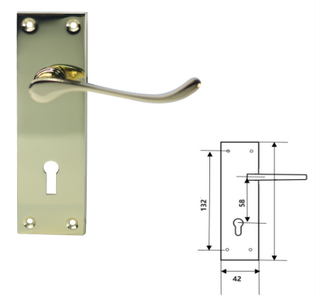

BS-JF-Z430

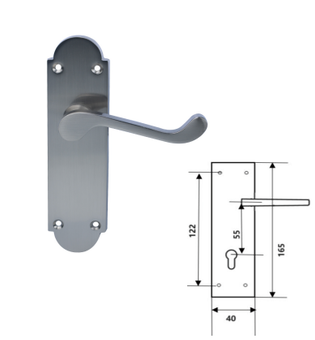

BS-JFZ377

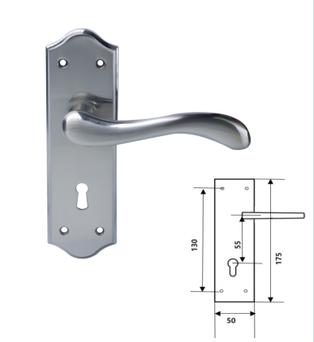

BS-JF-Z414

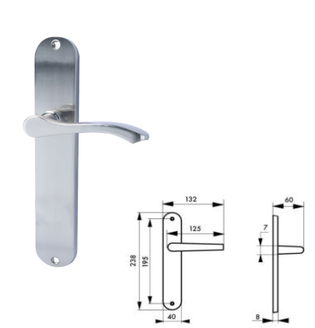

BS-JF-Z415-1



BS-JF-Z415-2



BS-JF-L131P

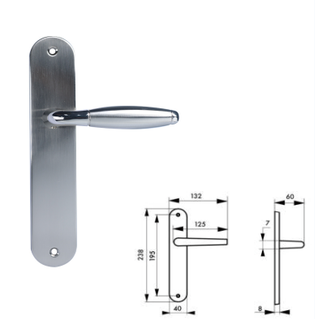

Product

Handle For Door

BS-WY-104P

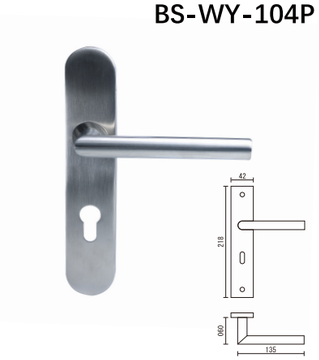

BS-JL-JL202

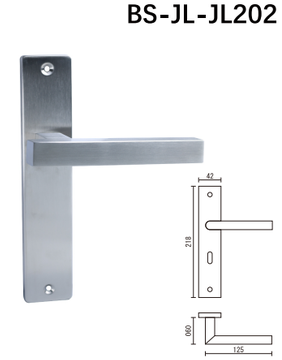

BS-WY-101P



BS-WY-102P

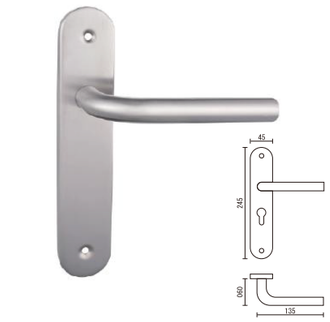

BS-JH-SS3070H08



BS-JH-SS3070H14



BS-WY-S245A

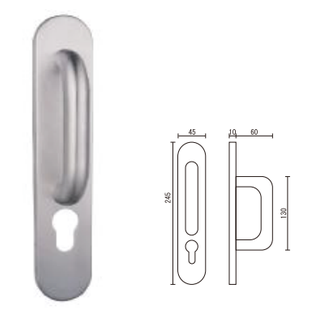

BS-WY-L001

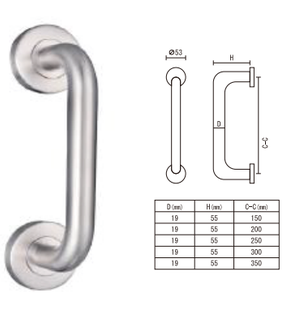

D (mm)	H (mm)	C-C (mm)
19	55	150
19	55	200
19	55	250
19	55	300
19	55	350

BS-WY-L002

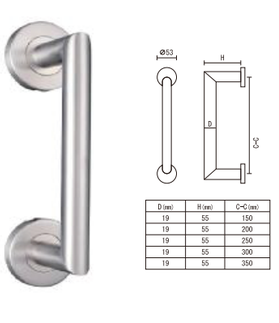

D (mm)	H (mm)	C-C (mm)
19	55	150
19	55	200
19	55	250
19	55	300
19	55	350



February 1996
Company Creation

1999
Purchased the first independent office

2000
A new factory building of 3000 square meters was purchased and B.S. METAL was established, mainly producing mortise locks

2003
Purchased the second independent office

2004
In response to national policies, it obtained the right to self operate imports and exports and was renamed as B.S

2005
BS METAL expanded its production line and added a product line for cylinder

2007
Purchased the third 500 square meter office in Changzhou World Trade Center to create a new office atmosphere

2009
BS METAL carried out standardized management and obtained strategic cooperation from European large supermarkets

2012
10 acres of land were purchased for expansion of the production workshop

2014
BS METAL's new factory building was completed, with over 10000 square meters of workshops starting production

2014
It has a fully automatic production line with cylinders and its own warehouse turnover and container loading equipment

2023
BS METAL story is still going on, we insist on cylinders

B.S. International Company Limited

Rm. A-2506/2507 World Trade Center, No.2 YanZheng Middle Road, Changzhou， JiangSu China Province P.C. 213100